finder
SWITCH TO THE FUTURE

# Modular step relays 16 A

- Automation for blinds, grilles and shutters
- Living room light control
- Bedroom light control
- Lighting control in corridors (for hotels, offices and hospitals)



20
SERIES

FINDER reserves the right to alter characteristics at any time without notice. FINDER assumes no liability for damage to persons or property, caused as a result of the incorrect use or application of its products.

**1 or 2 Pole 16 A Step relays for direct 35 mm rail (EN 60715) mounting**

- 17.4 mm wide
- Test button with mechanical indicators
- Choice of 7 switching sequences
- AC coils and DC coils
- Identification label
- According to EN 60601-1
  2 x MOPP
- Possible to connect illuminated push buttons with the additional part 026.00
- 35 mm rail (EN 60715) mount
- Cadmium free contact material

20.21/22/24/26/27/28/23
Screw terminal



*For UL ratings see:*
*"General technical information" page* V

For outline drawing see page 5

| | 20.21 | 20.22, 24, 26, 27, 28 | 20.23 |
|---|---|---|---|
| |  |  |  |
| | • Single phase switch 1 NO (SPST-NO)<br>• 35 mm rail (EN 60715) mount | • Double phase switch<br>• 35 mm rail (EN 60715) mount | • Double phase switch 1NO+1NC (SPST-NO+SPST-NC)<br>• 35 mm rail (EN 60715) mount |
| | 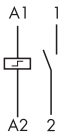 | 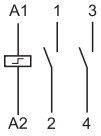 | 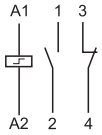 |
| **Contact specification** | | | |
| Contact configuration | 1 NO (SPST-NO) | 2 NO (DPST-NO) | 1NO+1NC (SPST-NO+SPST-NC) |
| Rated current/Maximum peak current A | 16/30 | 16/30 | 16/30 |
| Rated voltage/ Maximum switching voltage V AC | 250/400 | 250/400 | 250/400 |
| Rated load AC1 VA | 4000 | 4000 | 4000 |
| Rated load AC15 (230 V AC) VA | 750 | 750 | 750 |
| Nominal lamp rating: | | | |
| 230 V incandescent/halogen W | 2000 | 2000 | 2000 |
| fluorescent tubes with electronic ballast W | 1000 | 1000 | 1000 |
| fluorescent tubes with electromagnetic ballast W | 750 | 750 | 750 |
| CFL W | 400 | 400 | 400 |
| 230 V LED W | 400 | 400 | 400 |
| LV halogen or LED with electronic ballast W | 400 | 400 | 400 |
| LV halogen or LED with electromagnetic ballast W | 800 | 800 | 800 |
| Minimum switching load mW (V/mA) | 1000 (10/10) | 1000 (10/10) | 1000 (10/10) |
| Standard contact material | $AgSnO_2$ | $AgSnO_2$ | $AgSnO_2$ |
| **Coil specification** | | | |
| Nominal voltage ($U_N$) V AC (50/60 Hz) | 8 - 12 - 24 - 48 - 110 - 120 - 230 - 240 | | |
| V DC | 12 - 24 - 48 - 110 | 12 - 24 - 48 - 110 | 12 - 24 - 48 - 110 |
| Rated power AC/DC VA (50 Hz)/W | 6.5/5 | 6.5/5 | 6.5/5 |
| Operating range AC | (0.85…1.1)$U_N$ (50 Hz)/(0.9…1.1)$U_N$ (60 Hz) | | |
| DC | (0.9…1.1)$U_N$ | (0.9…1.1)$U_N$ | (0.9…1.1)$U_N$ |
| **Technical data** | | | |
| Mechanical life AC/DC cycles | $300 \cdot 10^3$ | $300 \cdot 10^3$ | $300 \cdot 10^3$ |
| Electrical life at rated load in AC1 cycles | $100 \cdot 10^3$ | $100 \cdot 10^3$ | $100 \cdot 10^3$ |
| Minimum/Maximum impulse duration | 0.1 s/1 h (according to EN 60669) | 0.1 s/1 h (according to EN 60669) | 0.1 s/1 h (according to EN 60669) |
| Insulation between coil and contacts (1.2/50 µs) kV | 4 | 4 | 4 |
| Ambient temperature range °C | –40…+40 | –40…+40 | –40…+40 |
| Protection category | IP 20 | IP 20 | IP 20 |
| **Approvals** (according to type) | CE UKCA EAC RINA cULus | | |

K

## Ordering information

Example: 20 series relay, 35 mm rail (EN 60715) mount, double phase switch, 2 NO 16 A contacts, coil rated at 12 V DC, $AgSnO_2$ contacts.

| 20 | . | 22 | . | 9 | . | 012 | . | 4 | 00 | 0 |
|---|---|---|---|---|---|---|---|---|---|---|

**Series**

**Type**
2 = 35 mm rail (EN 60715) mount

**No. of poles**
1 = Single phase switch 1 NO (SPST-NO)
2 = Double phase switch 2 NO (DPST-NO)
3 = Double phase switch 1 NC+ 1 NO (SPST-NO+SPST-NC)
4 = 4 sequence double phase switch 2 NO (DPST-NO)
6 = 3 sequence double phase switch 2 NO (DPST-NO)
7 = 3 sequence double phase switch 2 NO (DPST-NO)
8 = 4 sequence double phase switch 2 NO (DPST-NO)

**Coil version**
8 = AC (50/60 Hz)
9 = DC

**Coil voltage**
See coil specifications

**Contact material**
0 = AgNi
4 = $AgSnO_2$

## Technical data

| | | | | | |
|---|---|---|---|---|---|
| **Insulation** | | | | | |
| Dielectric strength | | | | | |
| between supply and contacts | V AC | 4000 | | | |
| between open contacts | V AC | 2000 | | | |
| between adjacent contacts | V AC | 2000 | | | |
| **Other data** | | | | | |
| Power lost to the environment with rated current and coil deenergised | W | 1.3 (20.21, 20.23, 20.28) | | 2.6 (20.22, 20.24, 20.26, 20.27) | |
| Screw torque | Nm | 0.8 | | 0.8 | |
| Max. wire size | | **Coil terminals** | | **Contact terminals** | |
| | | solid cable | stranded cable | solid cable | stranded cable |
| | $mm^2$ | 1 x 4 / 2 x 2.5 | 1 x 2.5 / 2 x 2.5 | 1 x 6 / 2 x 4 | 1 x 4 / 2 x 2.5 |
| | AWG | 1 x 12 / 2 x 14 | 1 x 14 / 2 x 14 | 1 x 10 / 2 x 12 | 1 x 12 / 2 x 14 |

If the coil is operated for a prolonged period of time, adequate ventilation of the relays must be provided - suggested gap of 9 mm between adjacent relays.

## Coil specifications

**DC version data**

| Nominal voltage $U_N$ | Coil code | Operating range $U_{min}$ | Operating range $U_{max}$ | Resistance R | Consumption I at $U_N$ |
|---|---|---|---|---|---|
| V | | V | V | Ω | mA |
| 12 | **9**.012 | 10.8 | 13.2 | 27 | 440 |
| 24 | **9**.024 | 21.6 | 26.4 | 105 | 230 |
| 48 | **9**.048 | 43.2 | 52.8 | 440 | 110 |
| 110 | **9**.110 | 99 | 121 | 2330 | 47 |

**AC version data**

| Nominal voltage $U_N$ | Coil code | Operating range $U_{min}$ | Operating range $U_{max}$ | Resistance R | Consumption I at $U_N$ (50 Hz) |
|---|---|---|---|---|---|
| V | | V | V | Ω | mA |
| 8 | **8**.008 | 6.8 | 8.8 | 4 | 800 |
| 12 | **8**.012 | 10.2 | 13.2 | 7.5 | 550 |
| 24 | **8**.024 | 20.4 | 26.4 | 27 | 275 |
| 48 | **8**.048 | 40.8 | 52.8 | 106 | 150 |
| 110 | **8**.110 | 93.5 | 121 | 590 | 64 |
| 120 | **8**.120 | 102 | 132 | 680 | 54 |
| 230 | **8**.230 | 192 | 253 | 2500 | 28 |
| 240 | **8**.240 | 204 | 264 | 2700 | 27.5 |

| Type | Number of steps | Sequence 1 | 2 | 3 | 4 |
|---|---|---|---|---|---|
| 20.21 | 2 |  |  | | |
| 20.22 | 2 |  |  | | |
| 20.23 | 2 |  |  | | |
| 20.24 | 4 |  |  |  |  |
| 20.26 | 3 |  |  |  | |
| 20.27 | 3 |  |  |  | |
| 20.28 | 4 |  |  |  |  |

K



X-2021, www.findernet.com

## Wiring diagrams

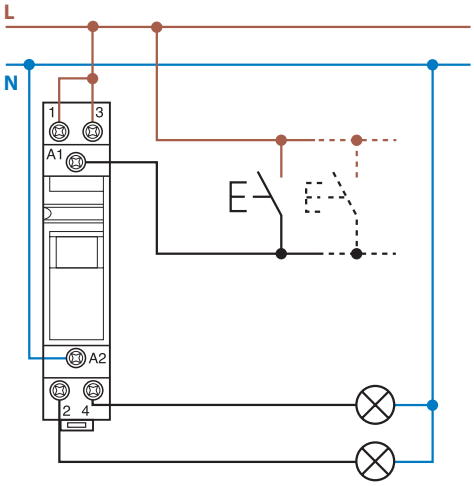


Example: 230 V AC supply voltage.

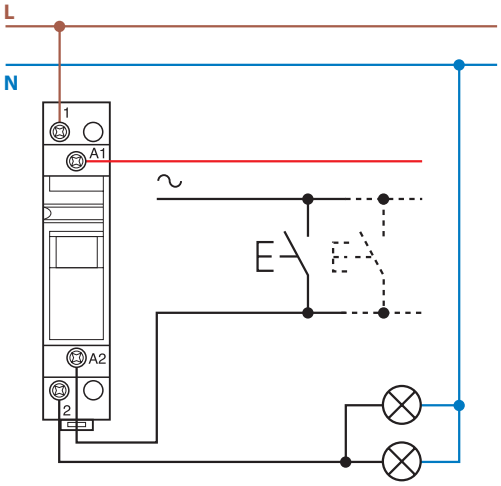


Example: 24 V AC supply voltage.

## Outline drawings

Type 20.21
Screw terminal



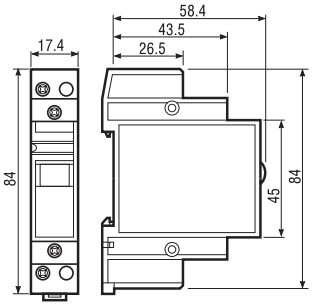


Types 20.22/24/26/27/28
Screw terminal



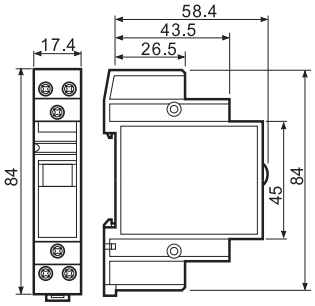


Type 20.23
Screw terminal



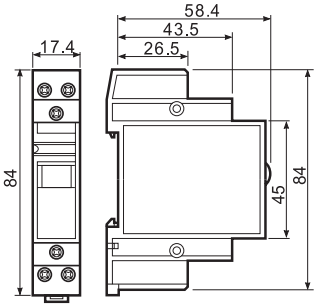


K

## Accessories

**Module for use with illuminated push-buttons**

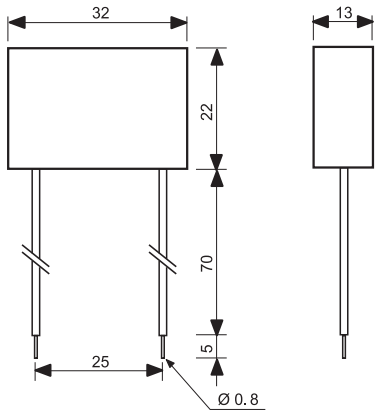


**Type 026.00**
Sealed construction, 7.5 cm insulated flexible wire termination.

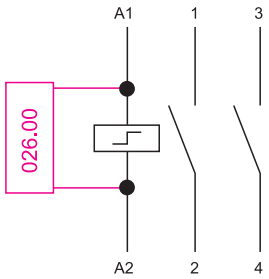


**Example of wiring diagram of type 026.00**
This module is necessary when using between 1 and a maximum of 15 illuminated push buttons in the coil circuit (Each 1.5 mA max, 230 V AC). It must be connected in parallel to the coil of the relay.



**020.01**

| | |
|---|---|
| **Adaptor for panel mounting,** 17.5 mm wide | 020.01 |



**022.09**

| | |
|---|---|
| **Separator for rail mounting,** plastic, 9 mm wide | 022.09 |

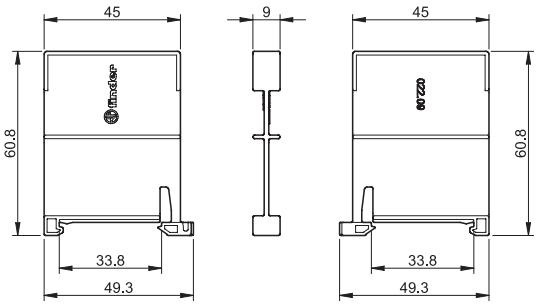


K