# Series HM Inverted Bucket Steam Trap

## Description
HM maintainable cast iron inverted bucket steam trap with in-line connections

## Limiting conditions
Maximum operating conditions depend upon orifice size.
Maximum body design conditions — PN16
PMA — max. allowable pressure 16 bar g
TMA — max. allowable temperature 300°C
Cold hydraulic test 24 bar g

## Operating range

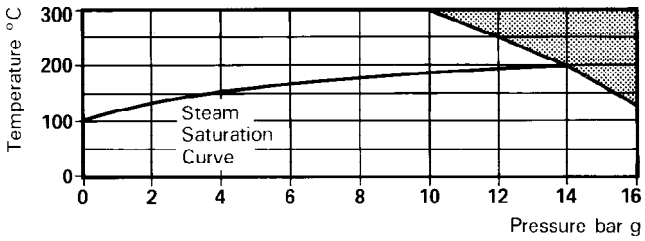


The product must not be used in this region

| | | | | Δ PMX — max. differential pressure | | |
|---|---|---|---|---|---|---|
| Screwed | Flanged | Screwed | Flanged | Screwed | Flanged | bar |
| | | | | HM12/7 | HM123/7 | 14 |
| | | HM10/7 | HM103/7 | | | 12.5 |
| HM00/6 | HM003/6 | | | | | 10 |
| HM00/7 | HM003/7 | HM10/8 | HM103/8 | HM12/10 | HM123/10 | 8.5 |
| HM00/8 | HM003/8 | HM10/10 | HM103/10 | HM12/12 | HM123/12 | 4 |

## Sizes and pipe connections
½" — HM00, ¾" — HM10 and 1" — HM12
Screwed BSP or NPT
DN 15 — HM003, DN 20 — HM103 and DN 25 — HM123.
Standard flange: BS 4504 and DIN PN16

## Materials

| No. | Part | Material | |
|---|---|---|---|
| 1 | Cover | Cast Iron | DIN 1691 GG 20 |
| 2 | Cover Bolts ½", ¾" | Steel | BS 3692 Gr.10 |
| | Cover Nuts ½", ¾" | Steel | BS 3692 Gr.10.9 |
| | Cover Bolts 1" | Steel | BS 3692 Gr.8.8 |
| | Cover Nuts 1" | Steel | BS 3692 Gr.8 |
| 3 | Body | Cast Iron | DIN 1691 GG 20 |
| 4 | Bucket | Stainless Steel | BS 1449 304 S16 |
| 5 | Valve Guide Plate | Stainless Steel | BS 4183 18/8 |
| | Screw | M4.5 x 10 | |
| 6 | Valve Guide Plate | Stainless Steel | BS 1449 304 S11 |
| 7 | Cover Gasket | Reinforced Exfoliated Graphite | |
| 8 | Valve Seat | Stainless Steel | AISI 440B |
| 9 | Valve | Stainless Steel | AISI 440B |
| 10 | Valve Lever | Stainless Steel | BS 1449 321 S31 |
| 11 | Ferrule HM00/10 | Stainless Steel | BS 970 321 S31 |
| | HM12 | Stainless Steel | BS 3605 (CFS) 304 S14 |
| 12 | Strainer Screen HM00 | Stainless Steel | ASTM A240 316L |
| 13 | Strainer Cap ½", ¾" | Cast Iron | DIN 1691 GG 20 |
| | 1" | SG Iron | DIN 1693 GGG40 |
| 14 | Strainer Gasket | Reinforced Exfoliated Graphite | |
| 15 | Plug | Stainless Steel | BS 970 416-537 |

**Sizes ½" & ¾"**

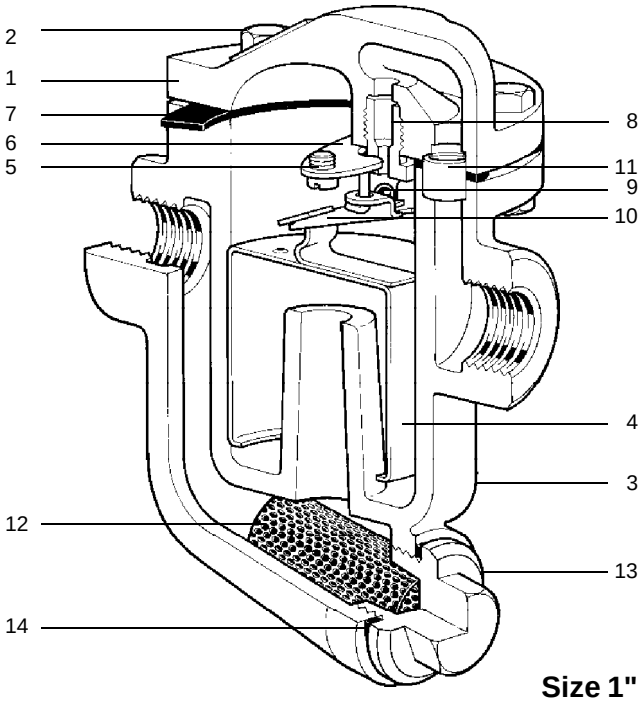


**Size 1"**

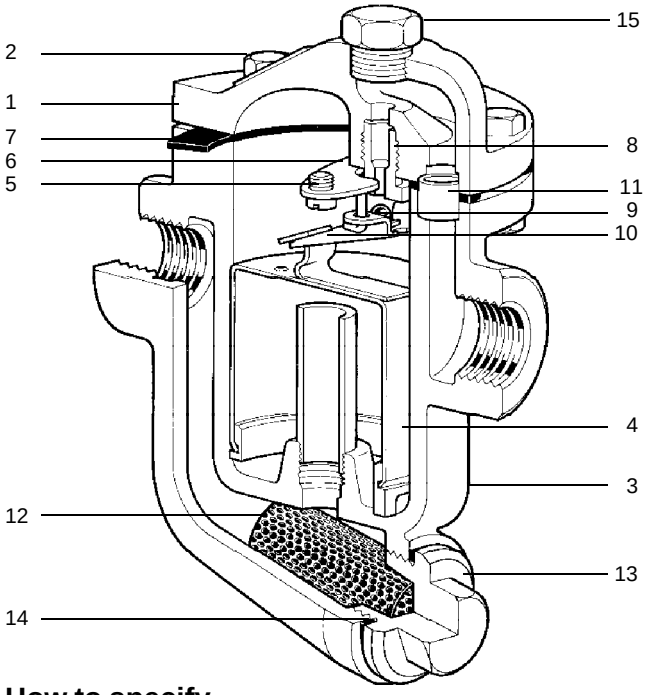


## How to specify
¾" HM10/7 Spirax Sarco Steam Trap with screwed BSP connections.

## Capacities
See TI-P072-02 (TIS 2.406) for capacities

*Local regulations may restrict the use of this product to below the conditions quoted.*
*In the interests of development and improvement of the product, we reserve the right to change the specification.*

*© Copyright 1994*

## Dimensions (approximate) in millimetres

| Size/ DN | A | A1 | B | C | F | G | H | J | Weight |
|---|---|---|---|---|---|---|---|---|---|
| ½" - 15 | 120 | 210 | 100 | 100 | 67 | 89 | 65 | M28 | 2.6 kg |
| ¾" - 20 | 120 | 210 | 100 | 140 | 88 | 107 | 65 | M28 | 3.2 kg |
| 1" - 25 | 180 | 230 | 160 | 160 | 145 | 120 | 85 | M32 | 8.8 kg |

## Installation

The trap must be installed with the body upright so that the bucket is rising and falling vertically. The inlet and outlet connections should be in a horizontal plane, with the trap installed below the drain point so that a water seal can be maintained around the open end of the bucket.

## Spare parts

The spare parts available are shown in heavy outline. Parts drawn in broken line are not supplied as spares.

| AVAILABLE SPARE | |
|---|---|
| Valve and Seat Assembly | 10,8,6 (2 off) 5 |
| Bucket | 4 |
| Cover Gasket & Ferrule | (pkt of 3 each) 7,11 |
| Strainer Screen | 12 |
| Strainer Screen Gasket | (pkt of 3 each) 14 |
| Set of Cover Bolts & Nuts | (set of 6) 2 |

**How to Order**

Always order spares by using the description given in the column headed Available Spare and stating the size and series of the trap.

Example: 1 — Valve and Seat Assembly for ½" Spirax Sarco Steam Trap Series HM00/7.

**How to Fit Valve and Seat Assembly**

Isolate trap, remove cover by undoing cover nuts. Unhook the bucket from the valve lever. Remove the valve seat. Remove the valve guide plate by undoing the two screws. Screw in new valve seat, using a little jointing paste on the threads and making sure the joint faces are clean. Fix new valve guide plate in position by new screws which are supplied, hook new valve lever over pins on valve guide plate and centralise valve to the orifice and tighten screws.

**Note**

Due to adoption of metric threads the spares for the HM series, other than buckets, are not interchangeable with the spares for the previous H series.

**Recommended tightening torques**

| Item No. | mm | mm or | Nm | Size |
|---|---|---|---|---|
| 2 | | M6 x 25 | 15-16 | ½", ¾" |
| 2 | | M12 x 45 | 85-95 | 1" |
| 8 | 13 | | 50-55 | ½", ¾" |
| 8 | 13 | | 80-88 | 1" |
| 13 | 22 | M28 | 90-100 | ½", ¾" |
| 13 | 27 | M32 | 125-145 | 1" |

