JUMO GmbH & Co. KG
Delivery address: Mackenrodtstraße 14
36039 Fulda, Germany
Postal address: 36035 Fulda, Germany
Phone: +49 661 6003-0
Fax: +49 661 6003-607
Email: mail@jumo.net
Internet: www.jumo.net

JUMO Instrument Co. Ltd.
JUMO House
Temple Bank, Riverway
Harlow, Essex CM 20 2DY, UK
Phone: +44 1279 63 55 33
Fax: +44 1279 62 50 29
Email: sales@jumo.co.uk
Internet: www.jumo.co.uk

JUMO Process Control, Inc.
6733 Myers Road
East Syracuse, NY 13057, USA
Phone: +1 315 437 5866
Fax: +1 315 437 5860
Email: info.us@jumo.net
Internet: www.jumousa.com

Indoor, Outdoor, and Channel RTD Temperature Probes



- For temperatures from -50 to +200 °C
- For use in air-conditioning technology
- Protection type IP20 to IP65
- Connection available in two-wire, three-wire, or four-wire circuit
- Available with analog transmitter

Indoor, outdoor, and channel RTD temperature probes for air-conditioning technology are mainly used for temperature measurement in rooms, in air channels, and outdoors.

Various device versions made of plastic with different protection types are available for the respective measuring task.

The measuring insert is fitted as standard with a Pt100 temperature sensor according to DIN EN 60751, class B in a two-wire circuit; versions with Pt500, Pt1000, Ni1000, and various NTCs are also available. From the connection terminals, wiring in a three-wire and four-wire circuit is also possible.
A transmitter can be integrated as an option.

Technical data

Cable socket	Plastic housing PC (basic type 902520/11, material PP), protection type IP20 to IP65, basic type 902524/25 protection type IP54 and IP65
Protection tube	Stainless steel 1.4571; dia. 6 mm
Measuring insert	Pt100 temperature sensor, DIN EN 60751, class B, two-wire circuit Pt1000 temperature sensor, DIN EN 60751, class B, two-wire circuit, Please see the order details for further options
Transmitter	Analog transmitter, output signal 4 to 20 mA or 0 to 10 V

Approvals / approval marks (see "Technical data")

Safety Integrity Level SIL QUALIFIED

Performance Level PL QUALIFIED

JUMO GmbH & Co. KG
Delivery address: Mackenrodtstraße 14
36039 Fulda, Germany
Postal address: 36035 Fulda, Germany
Phone: +49 661 6003-0
Fax: +49 661 6003-607
Email: mail@jumo.net
Internet: www.jumo.net

JUMO Instrument Co. Ltd.
JUMO House
Temple Bank, Riverway
Harlow, Essex CM 20 2DY, UK
Phone: +44 1279 63 55 33
Fax: +44 1279 62 50 29
Email: sales@jumo.co.uk
Internet: www.jumo.co.uk

JUMO Process Control, Inc.
6733 Myers Road
East Syracuse, NY 13057, USA
Phone: +1 315 437 5866
Fax: +1 315 437 5860
Email: info.us@jumo.net
Internet: www.jumousa.com

Transmitter

	Output 4 to 20 mA	Output 0 to 10 V
Input		
Measurement input	Pt100 (DIN EN 60751)	Pt100 (DIN EN 60751)
Sensor current	≤ 0.5 mA	≤ 0.5 mA
Sampling rate	Permanent measurement due to analog signal path	Permanent measurement due to analog signal path
Measuring circuit monitoring		
Underrange	Dropping to ≤ 3.6 mA	0 V
Overrange	Increasing to ≥ 22 to < 28 mA (typical 24 mA)	Increasing to ≥ 11 to < 14 V (typical 12 V)
Probe short circuit	≤ 3.6 mA	0 V
Probe/cable break	≥ 22 to < 28 mA (typical 24 mA)	≥ 11 to < 14 V (typical 12 V)
Output		
Output signal	Load-independent direct current: 4 to 20 mA	Direct voltage: 0 to 10 V
Transmission behavior	Temperature-linear	Temperature-linear
Transmission accuracy	≤ ±0.1 %	≤ ±0.2 %
Attenuation of the residual ripple of a voltage supply of 24 V, amplitude 10 V/50 Hz, burden 470 Ω/load 10 MΩ	37 dB	40 dB
Burden (Rb)	Rb = (Ub - 7.5 V) ÷ 22 mA	-
Burden influence	≤ ±0.02 %/100 Ω[a]	-
Load / load influence	-	≥ 10 kΩ/≤ ±0.1 %
Setting time for temperature changes	≤ 10 ms	≤ 10 ms
Calibration conditions	DC 24 V/approx. 22 °C	DC 24 V/approx. 22 °C
Calibration accuracy	≤ ±0.2 %[a,b] or ≤ ±0.2 K	≤ ±0.2 %[a,b] or ≤ ±0.2 K
Overall accuracy, sensor/calibration	±0.4 K (typical) at 20 °C/24 V voltage supply	±0.4 K (typical) at 20 °C/24 V voltage supply
Voltage supply		
Voltage supply (Ub)	DC 7.5 to 30 V	DC 15 to 30 V
Reverse voltage protection	Yes	Yes
Voltage supply influence	≤ ±0.01 %/V deviation from 24 V[a]	≤ ±0.01 %/V deviation from 24 V[a]
Environmental influences		
Operating temperature range	-40 to +85 °C	-40 to +85 °C
Storage temperature range	-40 to +100 °C	-40 to +100 °C
Temperature influence	≤ ±0.01 %/K deviation from 22 °C[a]	≤ ±0.01 %/K deviation from 22 °C[a]
Resistance to climatic conditions similar to DIN EN 60654 class C1	Relative humidity ≤ 95 % annual average, no condensation	Relative humidity ≤ 95 % annual average, no condensation
EMC interference emission/immunity	EN 61326 class B, industrial requirements	EN 61326 class B, industrial requirements

[a] All specifications refer to the measuring range end value of 20 mA.
[b] The higher value is valid.

Approvals / approval marks

Approval mark	Test facility	Certificate / certification number	Inspection basis	Valid for
SIL QUALIFIED PL QUALIFIED	-	-	-	Extra code 058 in conjunction with declaration of manufacturer

JUMO GmbH & Co. KG
Delivery address: Mackenrodtstraße 14
36039 Fulda, Germany
Postal address: 36035 Fulda, Germany
Phone: +49 661 6003-0
Fax: +49 661 6003-607
Email: mail@jumo.net
Internet: www.jumo.net

JUMO Instrument Co. Ltd.
JUMO House
Temple Bank, Riverway
Harlow, Essex CM 20 2DY, UK
Phone: +44 1279 63 55 33
Fax: +44 1279 62 50 29
Email: sales@jumo.co.uk
Internet: www.jumo.co.uk

JUMO Process Control, Inc.
6733 Myers Road
East Syracuse, NY 13057, USA
Phone: +1 315 437 5866
Fax: +1 315 437 5860
Email: info.us@jumo.net
Internet: www.jumousa.com

Connection diagram

Standard versions

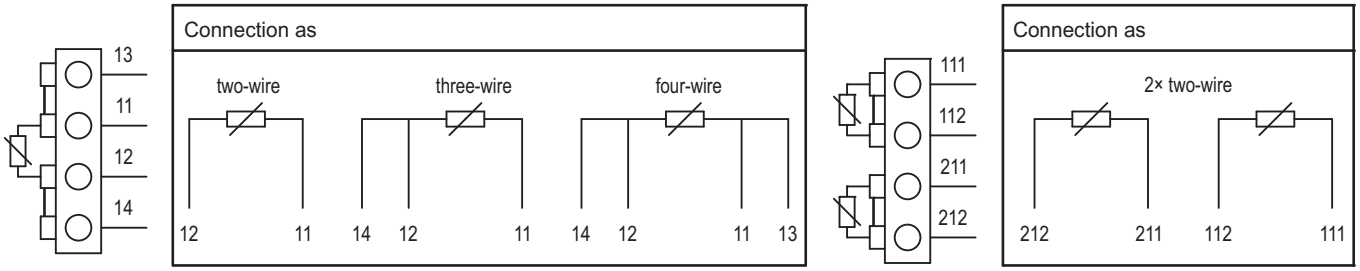

Transmitter for basic type 902520/10

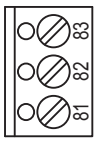

Output 4 to 20 mA

Connection for		Terminal assignment		
Voltage supply DC 7.5 to 30 V		+ 81	$R_B = \frac{U_b - 7.5\ V}{22\ mA}$	81 82
Current output 4 to 20 mA		- 82	R_B = Burden resistance U_b = Voltage supply	+ -

Output 0 to 10 V

Connection for		Terminal assignment		
Voltage supply DC 15 to 30 V		+ 81 - 82	Load ≥ 10 kΩ	81 82 83 + - +
Voltage output 0 to 10 V		- 82 + 83		

Transmitter for basic types 902520/2x and 902524/3x

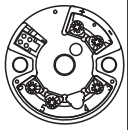

Output 4 to 20 mA

Connection for		Terminal assignment		
Voltage supply DC 7.5 to 30 V		+ 1 - 2	$R_B = \frac{U_b - 7.5\ V}{22\ mA}$	1 2 + -
Current output 4 to 20 mA			R_B = Burden resistance U_b = Voltage supply	

Output 0 to 10 V

Connection for		Terminal assignment		
Voltage supply DC 15 to 30 V		+ 1 - 2	Load ≥ 10 kΩ	1 2 3 + - +
Voltage output 0 to 10 V		- 2 + 3		

Connection examples

Connection example with power supply unit, output 4 to 20 mA

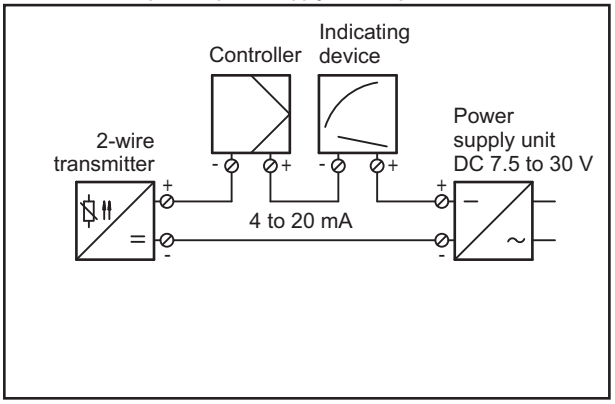

Connection example with power supply unit, output 0 to 10 V

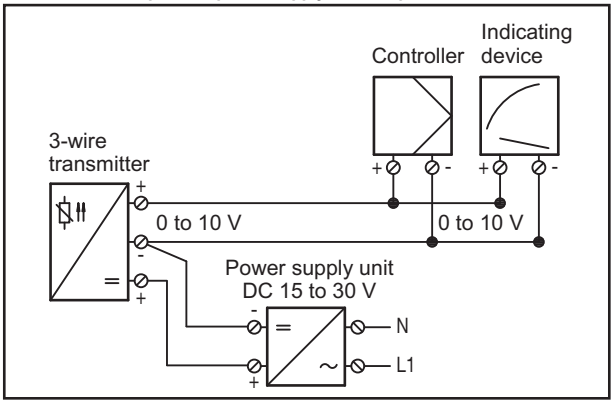

JUMO GmbH & Co. KG
Delivery address: Mackenrodtstraße 14
36039 Fulda, Germany
Postal address: 36035 Fulda, Germany
Phone: +49 661 6003-0
Fax: +49 661 6003-607
Email: mail@jumo.net
Internet: www.jumo.net

JUMO Instrument Co. Ltd.
JUMO House
Temple Bank, Riverway
Harlow, Essex CM 20 2DY, UK
Phone: +44 1279 63 55 33
Fax: +44 1279 62 50 29
Email: sales@jumo.co.uk
Internet: www.jumo.co.uk

JUMO Process Control, Inc.
6733 Myers Road
East Syracuse, NY 13057, USA
Phone: +1 315 437 5866
Fax: +1 315 437 5860
Email: info.us@jumo.net
Internet: www.jumousa.com

Dimensions

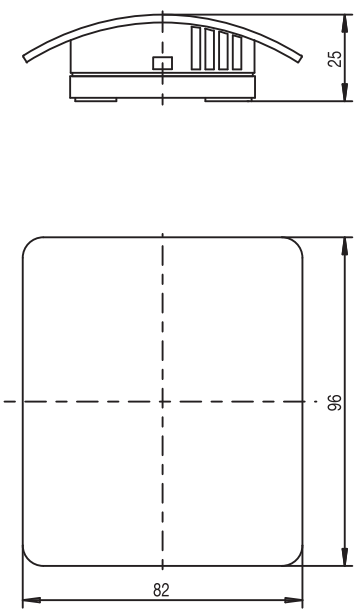

Basic type 902520/10

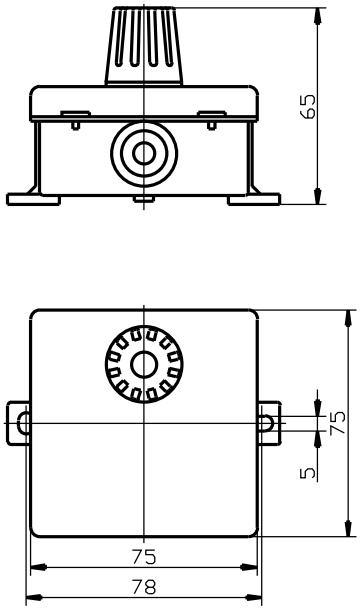

Basic type 902520/11

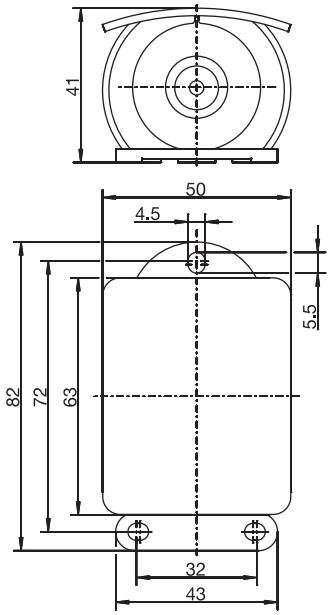

Basic type 902520/15

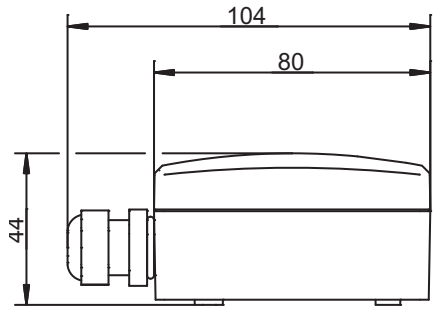

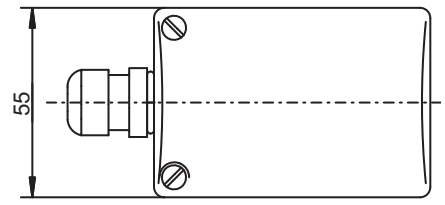

Basic type 902520/21

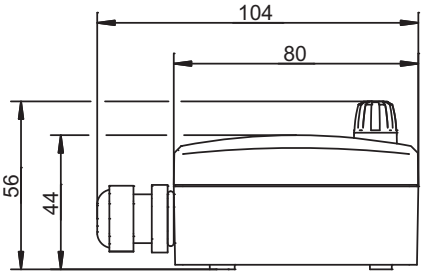

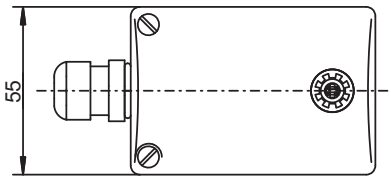

Basic type 902520/22

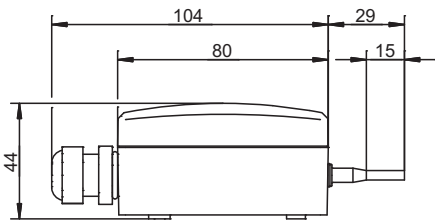

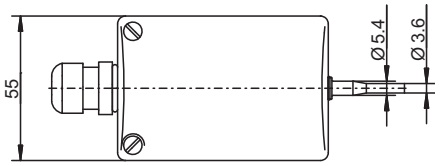

Basic type 902520/23

JUMO GmbH & Co. KG
Delivery address: Mackenrodtstraße 14
36039 Fulda, Germany
Postal address: 36035 Fulda, Germany
Phone: +49 661 6003-0
Fax: +49 661 6003-607
Email: mail@jumo.net
Internet: www.jumo.net

JUMO Instrument Co. Ltd.
JUMO House
Temple Bank, Riverway
Harlow, Essex CM 20 2DY, UK
Phone: +44 1279 63 55 33
Fax: +44 1279 62 50 29
Email: sales@jumo.co.uk
Internet: www.jumo.co.uk

JUMO Process Control, Inc.
6733 Myers Road
East Syracuse, NY 13057, USA
Phone: +1 315 437 5866
Fax: +1 315 437 5860
Email: info.us@jumo.net
Internet: www.jumousa.com

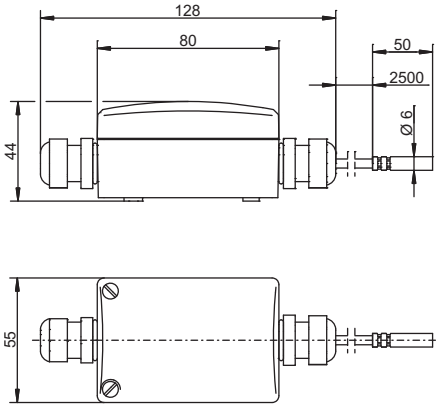

Basic type 902520/24

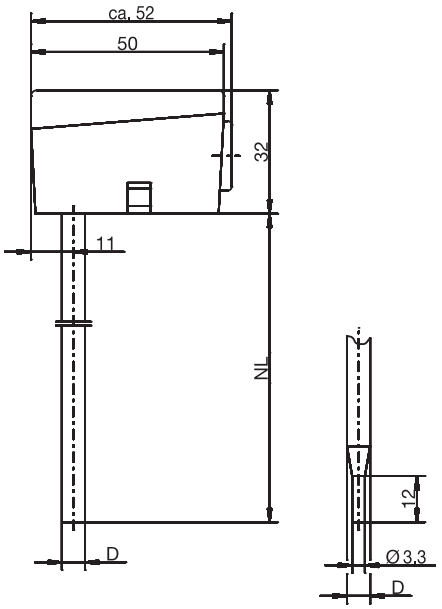

Basic type 902524/25

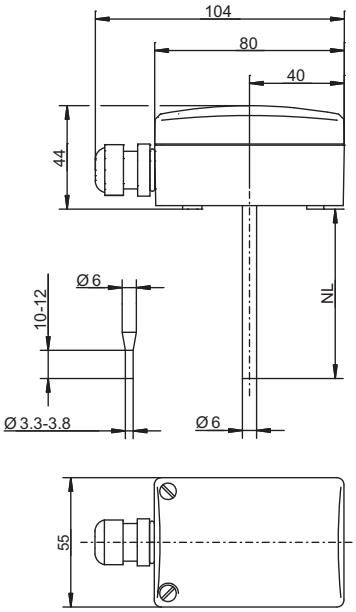

Basic type 902524/31

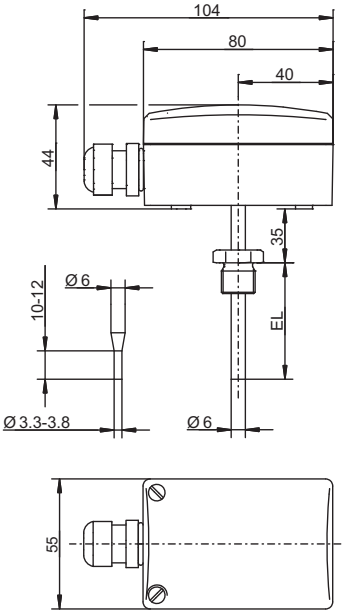

Basic type 902524/32

JUMO GmbH & Co. KG
Delivery address: Mackenrodtstraße 14
36039 Fulda, Germany
Postal address: 36035 Fulda, Germany
Phone: +49 661 6003-0
Fax: +49 661 6003-607
Email: mail@jumo.net
Internet: www.jumo.net

JUMO Instrument Co. Ltd.
JUMO House
Temple Bank, Riverway
Harlow, Essex CM 20 2DY, UK
Phone: +44 1279 63 55 33
Fax: +44 1279 62 50 29
Email: sales@jumo.co.uk
Internet: www.jumo.co.uk

JUMO Process Control, Inc.
6733 Myers Road
East Syracuse, NY 13057, USA
Phone: +1 315 437 5866
Fax: +1 315 437 5860
Email: info.us@jumo.net
Internet: www.jumousa.com

Order details

Indoor and outdoor RTD temperature probe

				(1)	**Basic type**
			902520/10		Indoor RTD temperature probe Protection type IP20
			902520/11		Indoor and outdoor RTD temperature probe Protection type IP54
			902520/15		Outdoor RTD temperature probe Protection type IP65
				(2)	**Operating temperature in °C**
		x	361		-50 to +90 °C
x			572		-30 to +80 °C
	x		635		-20 to +80 °C
x			803		0 to 40 °C (measuring range only in conjunction with transmitter)
x			807		0 to 60 °C (measuring range only in conjunction with transmitter)
				(3)	**Measuring insert**
x			1001		1× Pt100 in three-wire circuit
x	x	x	1003		1× Pt100 in two-wire circuit
x	x	x	1005		1× Pt1000 in two-wire circuit
x	x	x	1009		1× Ni1000 in two-wire circuit
		x	1619		1× KTY 81-110
		x	1728		1× NTC 1 kOhm
x			2001		2× Pt100 in three-wire circuit
	x		2003		2× Pt100 in two-wire circuit
				(4)	**Tolerance class according to DIN EN 60751**
		x	0		Technical data Ni/NTC/KTY
x	x	x	1		Class B (standard)
x		x	2		Class A
x		x	3		Class AA
				(5)	**Extra codes**
x	x	x	000		none
x	x	x	058		SIL and PL-compatible
x			330		1× analog transmitter, output 4 to 20 mA[a] (in conjunction with 1× Pt100), data sheet 707030
x			333		1× analog transmitter, output 0 to 10 V [a] (in conjunction with 1× Pt100), data sheet 707030
		x	903		Cable fitting (IP65)

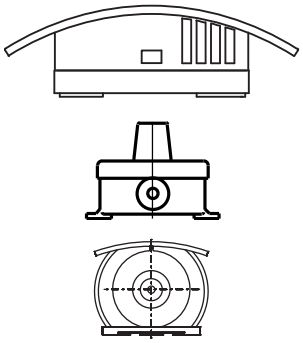

[a] Specify measuring range in plain text.

	(1)		(2)		(3)		(4)		(5)	
Order code		-		-		-		/		,...[a]
Order example	902520/10	-	572	-	1001	-	1	/	000	

[a] List extra codes in sequence, separated by commas.

JUMO GmbH & Co. KG
Delivery address: Mackenrodtstraße 14
36039 Fulda, Germany
Postal address: 36035 Fulda, Germany
Phone: +49 661 6003-0
Fax: +49 661 6003-607
Email: mail@jumo.net
Internet: www.jumo.net

JUMO Instrument Co. Ltd.
JUMO House
Temple Bank, Riverway
Harlow, Essex CM 20 2DY, UK
Phone: +44 1279 63 55 33
Fax: +44 1279 62 50 29
Email: sales@jumo.co.uk
Internet: www.jumo.co.uk

JUMO Process Control, Inc.
6733 Myers Road
East Syracuse, NY 13057, USA
Phone: +1 315 437 5866
Fax: +1 315 437 5860
Email: info.us@jumo.net
Internet: www.jumousa.com

Wall RTD temperature probe

					(1)	**Basic type**	
				902520/21		Wall RTD temperature probe with internal sensor Protection type IP65	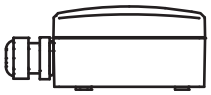
				902520/22		Wall RTD temperature probe with outer sensor Protection type IP65	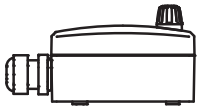
				902520/23		Wall RTD temperature probe with stepped-down protection tube Protection type IP65	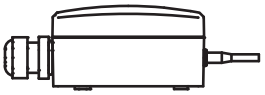
				902520/24		Wall RTD temperature probe with push-in RTD temperature probe with 2500 mm PVC connecting cable Protection type IP65	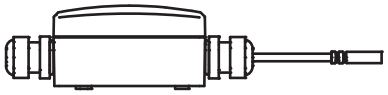
					(2)	**Operating temperature in °C**	
x	x	x		361		-50 to +90 °C	
x	x	x		474		-40 to +80 °C (measuring range only in conjunction with transmitter)	
			x	572		-30 to +80 °C (measuring range only in conjunction with transmitter)	
x	x	x	x	573		-30 to +90 °C (standard)	
					(3)	**Measuring insert**	
x	x	x	x	1003		1× Pt100 in two-wire circuit (standard)	
x	x	x	x	1005		1× Pt1000 in two-wire circuit	
x	x	x	x	1009		1× Ni1000 in two-wire circuit (TK 6180 ppm/K)	
x	x		x	1619		1× KTY 81-110	
x	x		x	1654		1× LM235 Z	
x	x	x	x	1728		1× NTC 1 kOhm	
x	x	x	x	2003		2× Pt100 in two-wire circuit	
x	x	x	x	2005		2× Pt1000 in two-wire circuit	
x	x		x	2009		2× Ni1000 in two-wire circuit (TK 6180 ppm/K)	
					(4)	**Tolerance class according to DIN EN 60751**	
x	x	x	x	0		Technical data Ni/NTC/KTY/LM235 Z	
x	x	x	x	1		Class B (standard)	
x	x	x	x	2		Class A	
x	x	x	x	3		Class AA	
					(5)	**Extra codes**	
x	x	x	x	000		none	
x	x	x	x	058		SIL and PL-compatible	
x	x	x	x	242		Spring-cage terminal	
x	x	x	x	330		1× analog transmitter, output 4 to 20 mA[a] (in conjunction with 1× Pt100), data sheet 707030	
x	x	x	x	333		1× analog transmitter, output 0 to 10 V[a] (in conjunction with 1× Pt100), data sheet 707030	

[a] Specify measuring range (deviating measuring range) in plain text.

	(1)		**(2)**		**(3)**		**(4)**		**(5)**
Order code		-		-		-		/	
Order example	902520/21	-	573	-	1003	-	1	/	000

JUMO GmbH & Co. KG
Delivery address: Mackenrodtstraße 14
36039 Fulda, Germany
Postal address: 36035 Fulda, Germany
Phone: +49 661 6003-0
Fax: +49 661 6003-607
Email: mail@jumo.net
Internet: www.jumo.net

JUMO Instrument Co. Ltd.
JUMO House
Temple Bank, Riverway
Harlow, Essex CM 20 2DY, UK
Phone: +44 1279 63 55 33
Fax: +44 1279 62 50 29
Email: sales@jumo.co.uk
Internet: www.jumo.co.uk

JUMO Process Control, Inc.
6733 Myers Road
East Syracuse, NY 13057, USA
Phone: +1 315 437 5866
Fax: +1 315 437 5860
Email: info.us@jumo.net
Internet: www.jumousa.com

Channel RTD temperature probe

		(1)	**Basic type**
	902524/25		Plug-in channel RTD temperature probe with smooth protection tube Protection type IP54
		(2)	**Operating temperature in °C**
x	380		-50 to +200 °C
		(3)	**Measuring insert**
x	1003		1× Pt100 in two-wire circuit (standard)
x	1005		1× Pt1000 in two-wire circuit
x	1009		1× Ni1000 in two-wire circuit
		(4)	**Tolerance class according to DIN EN 60751**
x	1		Class B (standard)
x	2		Class A
		(5)	**Protection tube diameter D in mm**
x	6		Dia. 6 mm
		(6)	**Nominal length NL in mm (NL 50 to 500)**
x	100		100 mm
x	150		150 mm
x	200		200 mm
x	...		Please specify in plain text (50 mm increments)
		(7)	**Process connection[a]**
x	000		none
		(8)	**Extra codes**
x	000		none
x	058		SIL and PL-compatible
x	310		Protection tube stepped down from dia. 6 mm to dia. 3.3 mm
x	404		Protection type IP65

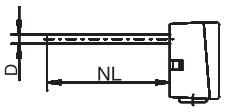

[a] Process connections can be found in the "Accessories for process connection" section.

	(1)		(2)		(3)		(4)		(5)		(6)		(7)		(8)	
Order code		-		-		-		-		-		-		/		,...[a]
Order example	902524/25	-	380	-	1003	-	1	-	6	-	100	-	000	/	000	

[a] List extra codes in sequence, separated by commas.

JUMO GmbH & Co. KG
Delivery address: Mackenrodtstraße 14
36039 Fulda, Germany
Postal address: 36035 Fulda, Germany
Phone: +49 661 6003-0
Fax: +49 661 6003-607
Email: mail@jumo.net
Internet: www.jumo.net

JUMO Instrument Co. Ltd.
JUMO House
Temple Bank, Riverway
Harlow, Essex CM 20 2DY, UK
Phone: +44 1279 63 55 33
Fax: +44 1279 62 50 29
Email: sales@jumo.co.uk
Internet: www.jumo.co.uk

JUMO Process Control, Inc.
6733 Myers Road
East Syracuse, NY 13057, USA
Phone: +1 315 437 5866
Fax: +1 315 437 5860
Email: info.us@jumo.net
Internet: www.jumousa.com

Channel RTD temperature probe

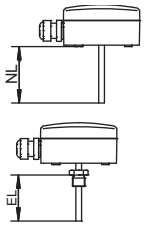

			(1)	**Basic type**
		902524/31		Plug-in channel RTD temperature probe with continuous protection tube, ambient temperature of housing: -30 to +90 °C Protection type IP65
		902524/32		Screw-in channel RTD temperature probe with continuous protection tube, ambient temperature of housing: -30 to +90 °C Protection type IP65
			(2)	**Operating temperature in °C**
x	x	380		-50 to +200 °C
			(3)	**Measuring insert**
x	x	1003		1× Pt100 in two-wire circuit
x	x	1005		1× Pt1000 in two-wire circuit
x	x	1009		1× Ni1000 in two-wire circuit
x	x	1619		1× KTY 81-110
x	x	1654		1× LM235 Z
x	x	1728		1× NTC 1 kOhm
x	x	2003		2× Pt100 in two-wire circuit
x	x	2005		2× Pt1000 in two-wire circuit
x	x	2009		2× Ni1000 in two-wire circuit
			(4)	**Tolerance class according to DIN EN 60751**
x	x	0		Technical data Ni/NTC/KTY/LM235 Z
x	x	1		Class B (standard)
x	x	2		Class A
x	x	3		Class AA
			(5)	**Protection tube diameter D in mm**
x	x	6		Dia. 6 mm
			(6)	**Nominal length NL in mm/insertion length EL in mm (50 to 500 mm)**
x	x	100		100 mm
x	x	150		150 mm
x	x	200		200 mm
x	x	...		Please specify in plain text (50 mm increments)
			(7)	**Process connection**
x		000		none
	x	102		Screw connection G 1/4
	x	103		Screw connection G 3/8
	x	104		Screw connection G 1/2
	x	128		Screw connection M20 × 1.5
	x	144		Screw connection 1/2-14NPT
			(8)	**Extra codes**
x	x	000		none
x	x	058		SIL or PL-compatible
x	x	242		Spring-cage terminal
x	x	310		Protection tube stepped down from dia. 6 mm to dia. 3.3 mm (not in conjunction with measuring insert 2× xxx)
x	x	330		1× analog transmitter, output 4 to 20 mA[a] (in conjunction with 1× Pt100), data sheet 707030
x	x	333		1× analog transmitter, output 0 to 10 V[a] (in conjunction with 1× Pt100), data sheet 707030
x	x	930		Ambient temperature of housing: -50 to +90 °C

[a] Specify measuring range (deviating measuring range) in plain text.

	(1)		(2)		(3)		(4)		(5)		(6)		(7)		(8)	
Order code		-		-		-		-		-		-		/		,...[a]
Order example	902524/31	-	380	-	1003	-	1	-	6	-	100	-	000	/	000	

[a] List extra codes in sequence, separated by commas.

JUMO GmbH & Co. KG
Delivery address: Mackenrodtstraße 14
36039 Fulda, Germany
Postal address: 36035 Fulda, Germany
Phone: +49 661 6003-0
Fax: +49 661 6003-607
Email: mail@jumo.net
Internet: www.jumo.net

JUMO Instrument Co. Ltd.
JUMO House
Temple Bank, Riverway
Harlow, Essex CM 20 2DY, UK
Phone: +44 1279 63 55 33
Fax: +44 1279 62 50 29
Email: sales@jumo.co.uk
Internet: www.jumo.co.uk

JUMO Process Control, Inc.
6733 Myers Road
East Syracuse, NY 13057, USA
Phone: +1 315 437 5866
Fax: +1 315 437 5860
Email: info.us@jumo.net
Internet: www.jumousa.com

Accessories for process connection

Description	Part no.
Stainless steel G 1/4 compression fitting, stainless steel clamping ring for protection tube diameter of 6 mm	00080811
Steel G 3/8 compression fitting, steel clamping ring for protection tube diameter of 6 mm	00057945
Stainless steel G 1/2 compression fitting, stainless steel clamping ring for protection tube diameter of 6 mm	00305445
Stainless steel M10 × 1 compression fitting, stainless steel clamping ring for protection tube diameter of 6 mm	00065416
Stainless steel 1/2-14NPT compression fitting, stainless steel clamping ring for protection tube diameter of 6 mm	00444210
Steel sheet flange for protection tube diameter of 6 mm	00065062

Stock versions

Order code	Part no.
902520/10-572-1001-1/000	00065671
902520/10-572-1005-1/000	00397862
902520/10-803-1003-1/330 (0 to 40 °C)	00064003
902520/10-807-1003-1/330 (0 to 60 °C)	00065717
902520/10-803-1003-1/333 (0 to 40 °C)	00439187
902520/11-635-1003-1/000	00055723
902520/15-361-1003-1/000	00546799
902520/15-361-1005-1/000	00546802
902520/15-361-1003-1/903	00546800
902520/15-361-1005-1/903	00546801
902520/15-361-1009-0/000	00549808
902520/22-573-1003-1/000	00650818
902520/22-573-1005-1/000	00650823
902520/22-474-1003-1/330 (-40 to +80 °C)	00650826
902520/23-573-1003-1/000	00650836
902520/23-573-1005-1/000	00650837
902520/23-474-1003-1/330 (-30 to +60 °C)	00658171
902520/23-474-1003-1/333 (-30 to +60 °C)	00671483
902520/23-474-1003-1/330 (-40 to +80 °C)	00650838
902520/23-474-1003-1/333 (-40 to +80 °C)	00650839
902524/25-380-1003-1-6-100-000/310,404	00410556
902524/25-380-1003-1-6-150-000/310,404	00410562
902524/25-380-1003-1-6-200-000/310,404	00410563
902524/31-380-1003-1-6-100-000/000	00650840
902524/31-380-1003-1-6-100-000/330 (-30 to +60 °C)	00650841