Maxi free-standing Beacons / Rotating Mirror Light 883

# Rotating Mirror Beacon LED 115-230VAC YE



**Part No.: 883.330.60**

| MECHANICAL DATA | |
|---|---|
| Height | 218 mm |
| Diameter | 142 mm |
| Materials | PC<br>PC/ABS |
| Dome colour | Yellow |
| Housing colour | Black |
| Protection category | IP65 |
| Connection | Screw terminals |
| cross-sectional area maximum | 1,50mm² / 16AWG |
| Cable entry | Rubber pinch |
| Cable entry minimum | d = 5 mm |
| Cable entry maximum | d = 7 mm |
| Tension relief | Pull-out protection |
| Type of fixing | Base mounting |
| Working temperature minimum | -30°C |
| Working temperature maximum | +50°C |
| Weight with packaging | 765 g |
| Product weight | 676 g |

| ELECTRICAL DATA | |
|---|---|
| Operating voltage | 115-230V |
| Operating voltage type | AC |
| Operating voltage frequency | 50Hz<br>60Hz |
| Operating voltage tolerance | +/- 10% |
| Rated operational voltage | 230 VAC |
| Rated operational current | 95 mA |
| Rated inrush current | 1.400 mA |
| Protection class | Protection class 2 |
| Pollution degree | 3 |
| Overvoltage category | II |
| Isolation voltage | Ui = 250V; Uimp = 2.500V |

| OPTICAL DATA | |
|---|---|
| Light source | LED |
| Light colour | Yellow |
| Optical signal image | Revolving |
| Service life optical | 50,000 h minimum |
| Rotation speed (rpm) | 180 U/min |

! For additional installation and mounting information, refer to the appropriate user guide at www.werma.com. This printed copy is for information only and is subject to alteration.

Maxi free-standing Beacons / Rotating Mirror Light 883

# Rotating Mirror Beacon LED 115-230VAC YE

**DRAWING**

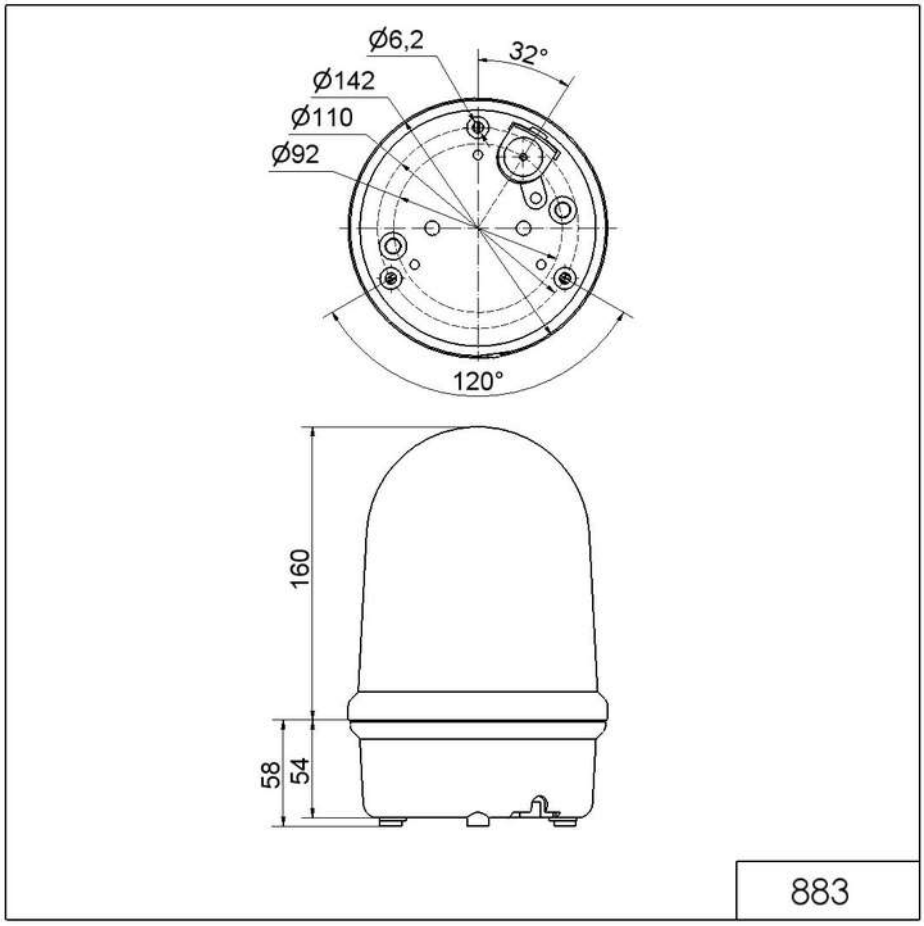


! For additional installation and mounting information, refer to the appropriate user guide at www.werma.com. This printed copy is for information only and is subject to alteration.