OF5021

Through-beam sensor transmitter

OFS-OOKG/US-100

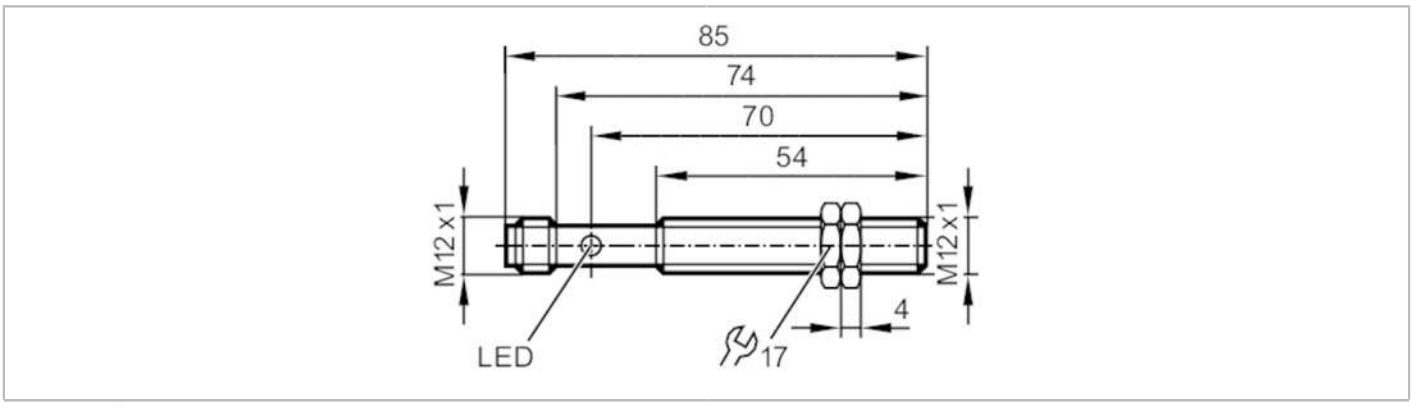

Product characteristics		
Type of light		infrared light
Housing		threaded type
Application		
Function principle		Through-beam sensor
Electrical data		
Operating voltage	[V]	10...36 DC
Current consumption	[mA]	< 25
Protection class		II
Reverse polarity protection		yes
Type of light		infrared light
Wave length	[nm]	880
Outputs		
Short-circuit protection		yes
Type of short-circuit protection		pulsed
Overload protection		yes
Detection zone		
Transmitter / receiver		transmitter
Range	[m]	< 4
Range adjustable		no
Max. light spot diameter	[mm]	700
Light spot dimensions refer to		at maximum range
Operating conditions		
Ambient temperature	[°C]	-25...60
Protection		IP 65
Tests / approvals		
EMC		EN 60947-5-2
MTTF	[years]	1597
Mechanical data		
Weight	[g]	35.5

OF5021

Through-beam sensor transmitter

OFS-OOKG/US-100

Housing		threaded type
Dimensions	[mm]	M12 x 1 / L = 74
Thread designation		M12 x 1
Materials		housing: brass white bronze coated
Lens material		PMMA

Displays / operating elements

Display	operation	1 x LED, green

Accessories

Items supplied	lock nuts: 2

Remarks

Pack quantity	1 pcs.

Electrical connection

Connector: 1 x M12; coding: A



Connection

