multimec®

Square cap with different top surface options

5G + 1KS/1KBS/1KCS+2K

- Square caps
- Different top surfaces: flat, convex or concave
- 14.3 mm x 14.3 mm
- h =19.1 mm; 20.2 mm; 20.1 mm
- Material: ABS/polycarbonate
- Temp. Range:
  - Solid cap: -40/+65°C
  - Transparent cap: -40/+85°C
- Panel cut-out: 1KS/1KBS/1KCS-14.7 x 14.7

All dimensions in mm



Custom solution

DIMENSIONS

SMD w/LED + 1KS

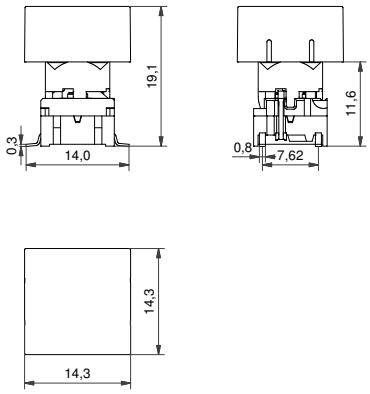

TH w/LED + 1KBS

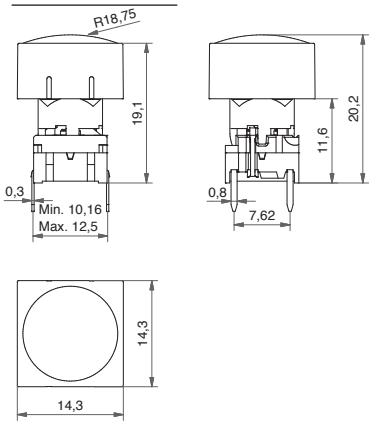

SMD w/LED + 1KCS

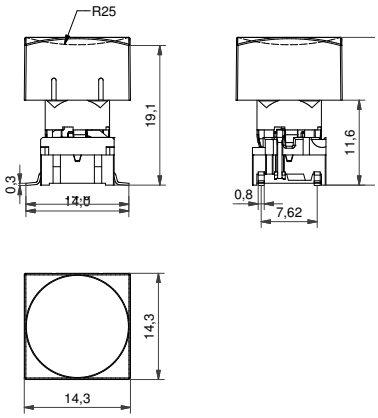

Bezel (optional)

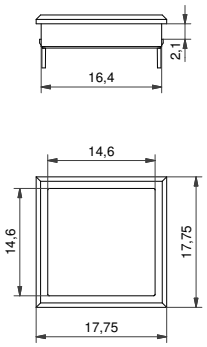

ILLUMINATED – HOW TO ORDER

Switch	Mounting	Actuation force	LED		Cap		Bezel
5 G				+	1 1 1 6	+	2 K

Switch: 5G

Mounting:
- **TH9** through-hole
- **SH9** surface mount

Actuation force:
- **20**
- **35**
- **65**
- **Q***

LED:
- **01** blue
- **22** green
- **42** yellow
- **61** white
- **82** red
- **2242** green/yellow
- **8222** red/green
- **8242** red/yellow

Cap: 1116

Frosted white lens and transparent lid

1KS



1KCS



1KBS



Bezel: 2K

- **03** grey
- **06** white
- **08** red
- **09** black

*For an illuminated quiet 2.0N switch add Q to the end of the switch part number.

NON-ILLUMINATED– HOW TO ORDER

Switch	Mounting	Actuation force		Cap		Bezel
5 G			+	1 K S	+	2 K

Switch: 5G

Mounting:
- **TH9** through-hole
- **SH9** surface mount

Actuation force:
- **20**
- **20Q**
- **35**
- **65**

Cap: 1KS16

Frosted white lens

1KS



Colour code
- **00** blue
- **02** green
- **03** grey
- **04** yellow
- **06** white
- **08** red
- **09** black

Bezel: 2K

- **03** grey
- **06** white
- **08** red
- **09** black

Ordering example:
5GTH93501+1KCS1116+2K09 with illumination OR 5GSH965+1KS09+2K03 without illumination OR *5GTH92082Q (illuminated quiet version)
Please see colour codes, updates of products and changes of specifications on www.mec.dk