3/2-directional valve, pneumatically operated, Series AS1-SOV

R412014665

General series information
Series AS1

- The AVENTICS Series AS1 is a modular, versatile maintenance unit for universal application. This Series offers compact dimensions, is highly efficient, lightweight and easy-to-use. The AVENTICS Series AS guarantees reliability, safety, and efficiency with a simplified assembly and maintenance efforts.



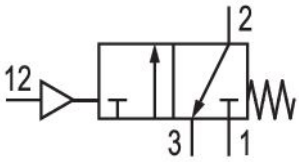

Technical data

Industry
Industrial

Activation
Pneumatically

Parts
3/2-directional valve

Nominal flow Qn
2000 l/min

Air supply
left

Compressed air connection
G 1/4

Working pressure min.
0 bar

Working pressure max
12 bar

Connection type
Pipe connection

Sealing principle
Soft Seal

Type
Poppet valve

Can be assembled into blocks
Can be assembled into blocks

Control pressure min.
2.5 bar

Control pressure max.
12 bar

Min. ambient temperature
-10 °C

Max. ambient temperature
50 °C

Medium
Compressed air
Neutral gases

Compressed air connection pilot exhaust
G 1/8

Compressed air connection, exhaust
G 1/4

Nominal flow Qn 1 to 2
2000 l/min

Nominal flow Qn 2 to 3
380 l/min

Weight
0.09 kg

Material

Housing material
Polyamide

Seal material
Acrylonitrile butadiene rubber

Material, front cover
Acrylonitrile butadiene styrene

Part No.
R412014665

Technical information

The pressure dew point must be at least 15 °C under ambient and medium temperature and may not exceed 3 °C .

Nominal flow Qn with secondary pressure p2 = 6 bar at Δp = 1 bar

Dimensions in mm

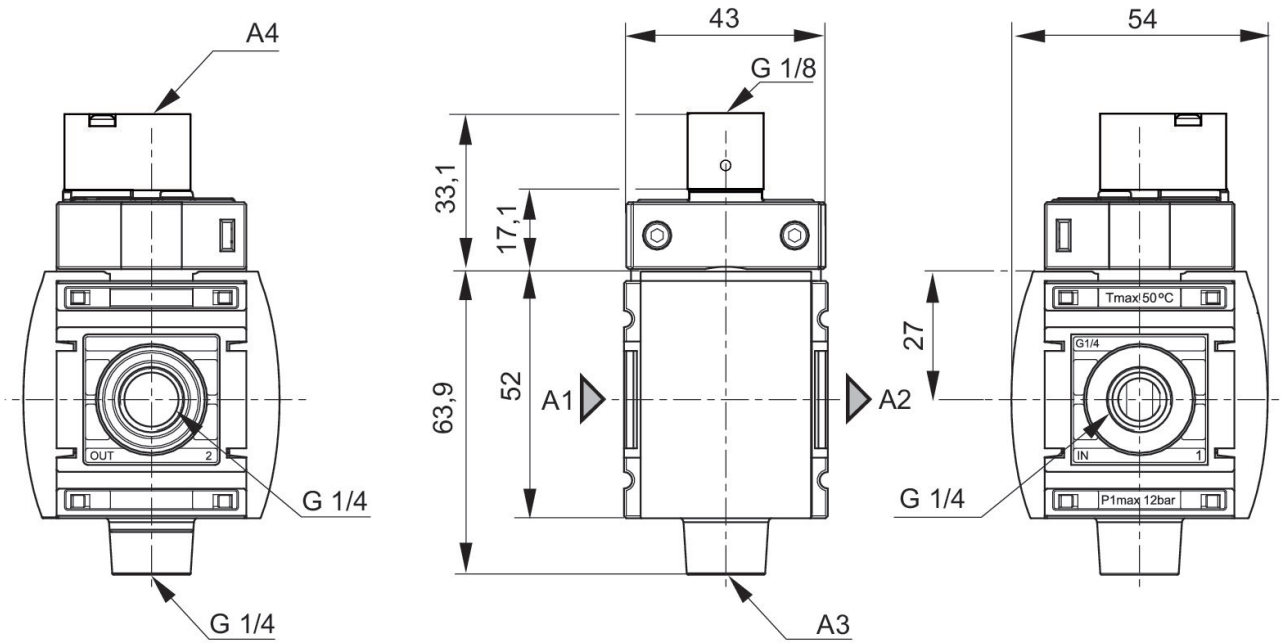

A1 = input
A2 = output
A3 = ventilation port
A4 = control pressure connection

Rear exhaust

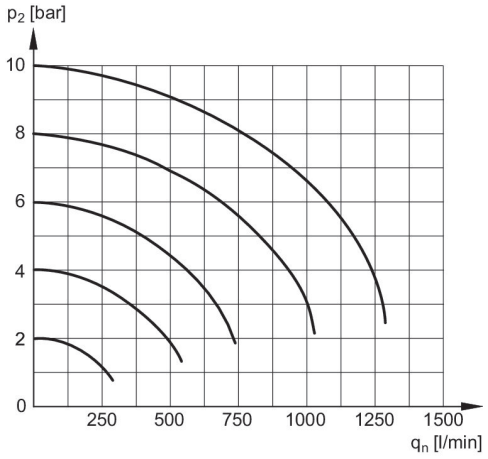

p2 = Secondary pressure
qn = Nominal flow

Flow rate characteristic, p2 = 0,05 - 7 bar

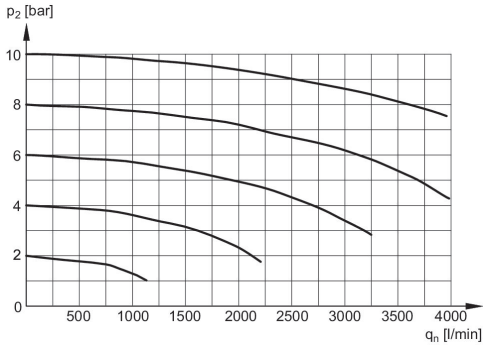

p2 = Secondary pressure
qn = Nominal flow

Accessories overview

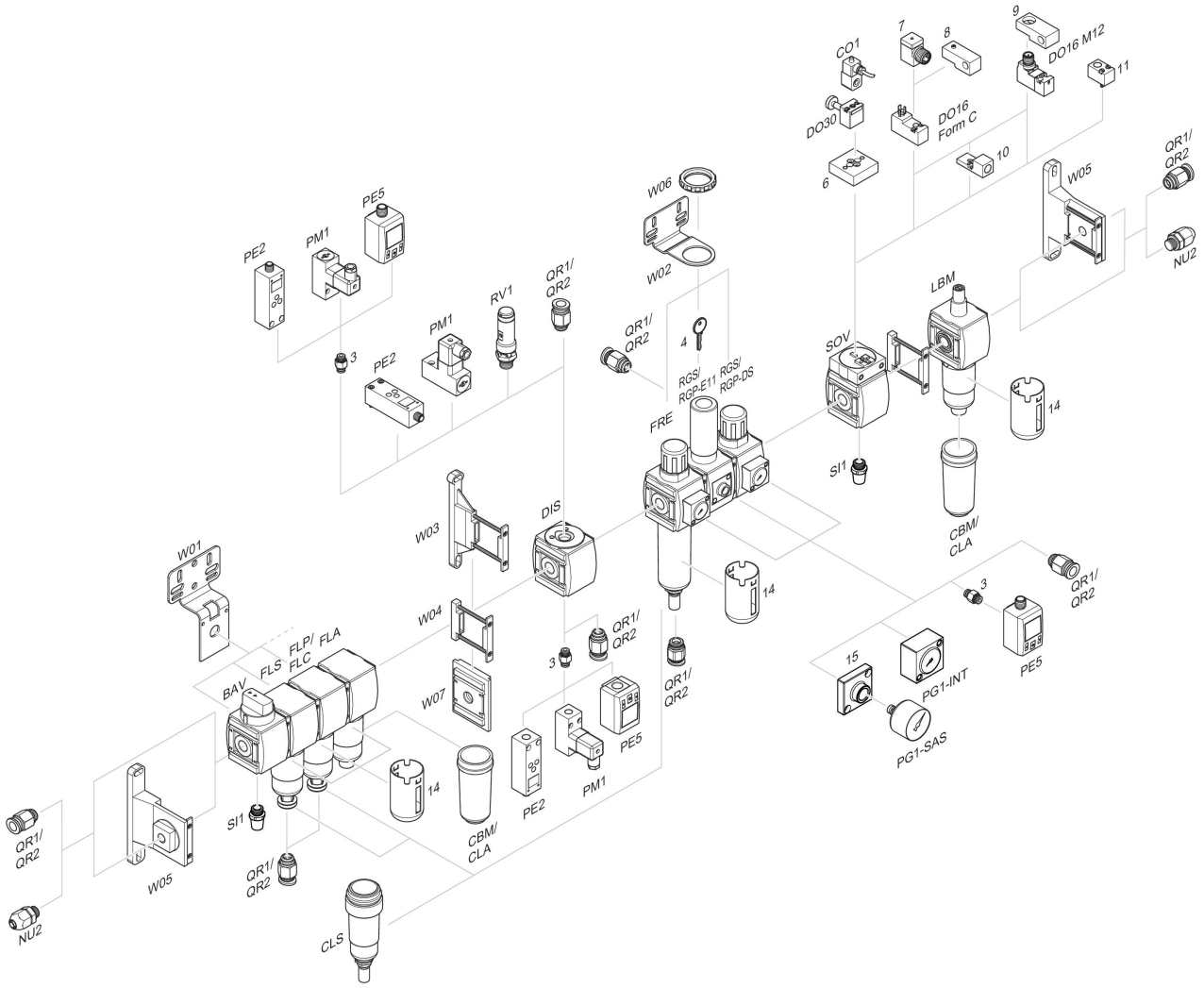

3 = Double nipple 4 = Key for E11 locking 6 = Transition plate DO30 7 = Adapter, Series CON-VP 8 = Mounting aid DO16, form C 9 = Mounting aid DO16, M12 10 = Adapter for external pilot air 11 = Adapter pneumatic operation 14 = Protective guard 15 = Transition plate for assembling a pressure gauge with connection thread G 1/8