

Image may differ from product. See technical specification for details.

1307 EKTN9

Self-aligning ball bearing with tapered bore

Self-aligning ball bearings, with a tapered bore, have two rows of balls, a common sphered raceway in the outer ring and two deep uninterrupted raceway grooves in the inner ring. They are insensitive to angular misalignment of the shaft relative to the housing, which can be caused, for example, by shaft deflection. The tapered bore facilitates ease of mounting via adapter sleeves or withdrawal sleeves.

- Ease of mounting via adapter sleeves or withdrawal sleeves
- Accommodate static and dynamic misalignment
- Excellent high-speed performance
- Excellent light load performance
- Low friction

Overview

Dimensions

Bore diameter	35 mm
Outside diameter	80 mm
Width	21 mm

Performance

Basic dynamic load rating	26.5 kN
Basic static load rating	8.5 kN
Reference speed	16 000 r/min
Limiting speed	11 000 r/min

Properties

Retaining feature, inner ring	None
Locating feature, bearing outer ring	None
Number of rows	2
Bore type	Tapered 1:12
Cage	Non-metallic
Radial internal clearance	CN
Tolerance class	Normal
Material, bearing	Bearing steel
Coating	Without
Sealing	Without
Lubricant	None
Relubrication feature	Without

Logistics

Product net weight	0.5 kg
eClass code	23-05-08-06
UNSPSC code	31171532

Technical specification

Bore type	Tapered 1:12

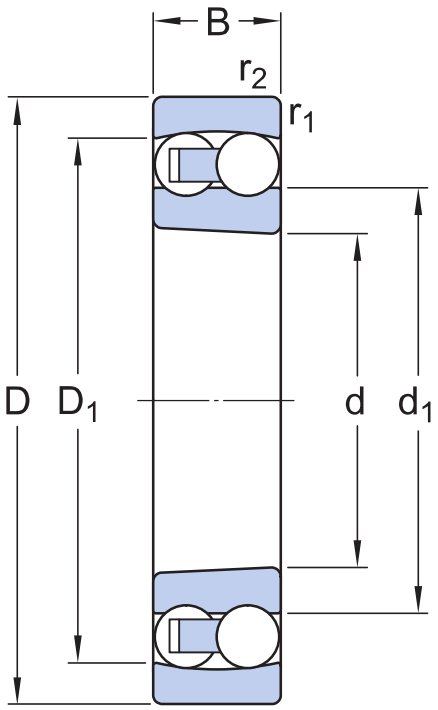

Dimensions

d	35 mm	Bore diameter
D	80 mm	Outside diameter
B	21 mm	Width
d_1	≈ 51.55 mm	Shoulder diameter inner ring
D_1	≈ 68.953 mm	Shoulder diameter outer ring
$r_{1,2}$	min. 1.5 mm	Chamfer dimension

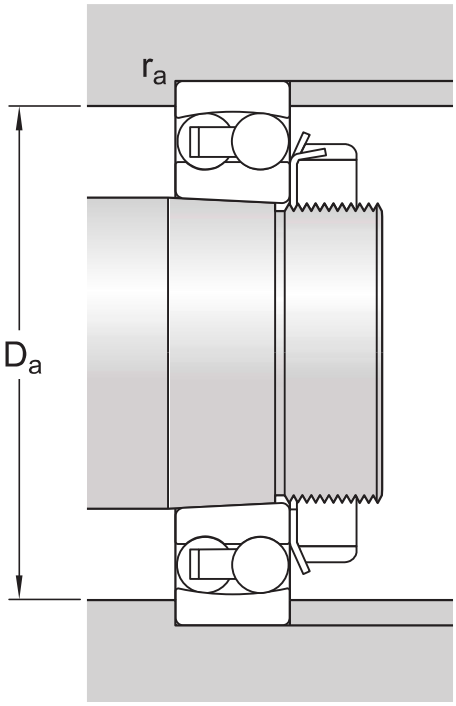

Abutment dimensions

D_a	max. 71 mm	Abutment diameter housing
r_a	max. 1.5 mm	Fillet radius

Calculation data

Basic dynamic load rating	C	26.5 kN
Basic static load rating	C_0	8.5 kN
Fatigue load limit	P_u	0.43 kN
Reference speed		16 000 r/min
Limiting speed		11 000 r/min
Permissible angular misalignment	α	3 °
Calculation factor	k_r	0.04
Limiting value	e	0.25
Calculation factor	Y_0	2.5
Calculation factor	Y_1	2.5
Calculation factor	Y_2	3.9

Tolerances and clearances

GENERAL BEARING SPECIFICATIONS

- Tolerances: Normal, JS7
- Radial internal clearance: table

BEARING INTERFACES

- Seat tolerances for standard conditions
- Tolerances and resultant fits

Compatible products

Recommended product

Adapter sleeve with KM lock nut and MB lock washer, metric dimensions	H 307
Adapter sleeve with KM lock nut and MB lock washer, metric dimensions with inch bore	HA 307

More Information

Product details

- Designs and variants
- General bearing specifications
- Loads
- Temperature limits
- Permissible speed
- Design considerations
- Mounting
- Designation system

Engineering information

- Principles of rolling bearing selection
- General bearing knowledge
- Bearing selection process
- Bearing interfaces
- Seat tolerances for standard conditions
- Selecting internal clearance
- Lubrication
- Sealing, mounting and dismounting
- Bearing failure and how to prevent it

Tools

- SKF Product select - Select and evaluate bearing
- SKF Product select - Combine housing with bearing
- SimPro Quick
- LubeSelect for SKF greases
- Heater selection tool
- Drive-up Method Program
- Oil Injection Method Program
- Tool and Accessory Selector for sleeves and shafts

Terms of use

By accessing and using this website / app owned and published by AB SKF (publ.) (556007-3495 · Gothenburg) (“SKF”), you agree to the following terms and conditions:

Warranty Disclaimer and Limitation of Liability

Although every care has been taken to assure the accuracy of the information on this website / app, SKF provides this information "AS IS" and DISCLAIMS ALL WARRANTIES, EXPRESS OR IMPLIED, INCLUDING, BUT NOT LIMITED TO, IMPLIED WARRANTIES OF MERCHANTABILITY AND FITNESS FOR A PARTICULAR PURPOSE. You acknowledge that your use of this website / app is at your sole risk, that you assume full responsibility for all costs associated with use of this website / app, and that SKF shall not be liable for any direct, incidental, consequential, or indirect damages of any kind arising out of your access to, or use of the information or software made available on this website / app.

Any warranties and representations in this website / app for SKF products or services that you purchase or use will be subject to the agreed upon terms and conditions in the contract for such product or service.

Further, for non-SKF websites / apps that are referenced in our website / app or where a hyperlink appears, SKF makes no warranties concerning the accuracy or reliability of the information in these websites / apps and assumes no responsibility for material created or published by third parties contained therein. In addition, SKF does not warrant that this website / app or these other linked websites / apps are free from viruses or other harmful elements.

Third Party Services

When viewing YouTube content via the SKF website(s) (i.e. using YouTube API Services), you agree to be bound by the YouTube Terms of Service.

Copyright

Copyright in this website / app copyright of the information and software made available on this website / app rest with SKF or its licensors. All rights are reserved. All licensed material will reference the licensor that has granted SKF the right to use the material. The information and software made available on this website / app may not be reproduced, duplicated, copied, transferred, distributed, stored, modified, downloaded or otherwise exploited for any commercial use without the prior written approval of SKF. However, it may be reproduced, stored and downloaded for use by individuals without prior written approval of SKF. Under no circumstances may this information or software be supplied to third parties.

This website /app includes certain images used under license from Shutterstock, Inc.

Trademarks and Patents

All trademarks, brand names, and corporate logos displayed on the website / app are the property of SKF or its licensors, and may not be used in any way without prior written approval by SKF. All licensed trademarks published on this website / app reference the licensor that has granted SKF the right to use the trademark. Access to this website / app does not grant to the user any license under any patents owned by or licensed to SKF.

Changes

SKF reserves the right to make changes or additions to this website / app at any time.