Brand of NTN corporation

Technical data

USPFL206

Bearing units



Sheet metal housing, radial insert ball bearing with socket set screws, single lip seal

KIT CONTENT

US.206.G2, PFL206

VISUAL (S)

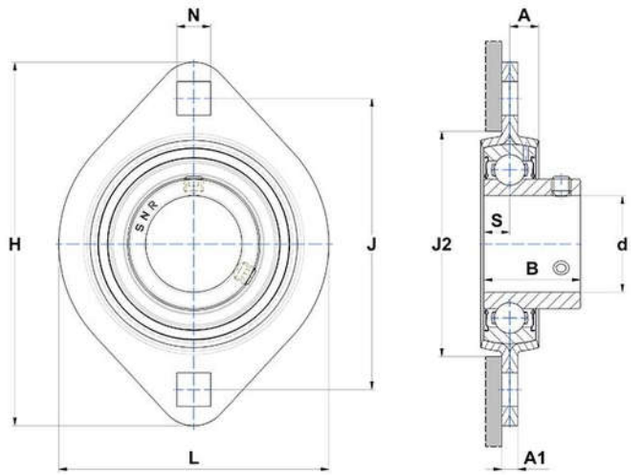

PRODUCT DEFINITION

Brand	SNR
A - Housing height	9 mm
A1 - Housing foot height / flange height	5 mm
A2 - Total height from mounting surface	24,5 mm
B - Width of Inner Ring	30 mm
d - Shaft diameter	30 mm

USPFL206
Bearing units

PRODUCT DEFINITION	
e - Distance mounting surface to bearing center	2,5 mm
H - Housing length, width or diameter	112,7 mm
J - Mounting holes distance	90,5 mm
L - Housing width / diameter	84 mm
N - Mounting hole dimension	10,5 mm
S - Distance front side/bearing centre	8 mm

PRODUCT PERFORMANCE	
C - Dynamic load rating	19500000 mN
C0 - Static load rating	11200000 mN
Operating temperature min.	253,15 °K
Operating temperature max.	373,15 °K

OTHER FEATURES	
Mass	0,43 kg
Recommended tightening torque for set screw	5.5 N-m