Product Details

A105 Stainless Steel Stud and Base



Materials

Base - Pressed Stainless Steel type 303 with inset Nitrile Rubber Core
Stud - Stainless Steel type 303

Part No.	Thread Size D1 (mm)	Thread Length L (mm)	Base Diameter D2 (mm)	Overall Height H (mm)	Maximum Recommended Load (kg)
A105/001	M10	50	50	75	350
A105/003	M10	100	50	125	350
A105/006	M12	100	50	125	350
A105/008	M12	150	50	175	350
A105/011	M16	100	50	128	350
A105/013	M16	150	50	178	350
A105/016	M16	100	75	133	750
A105/018	M16	150	75	183	750
A105/019	M16	200	75	233	750
A105/028	M20	150	75	185	750
A105/029	M20	200	75	235	750
A105/022	M16	100	100	138	1000
A105/024	M16	150	100	188	1000
A105/025	M16	200	100	238	1000
A105/033	M20	150	100	191	1000
A105/034	M20	200	100	241	1000
A105/036	M24	150	100	193	1000
A105/038	M24	250	100	293	1000

Dimensions are approximate

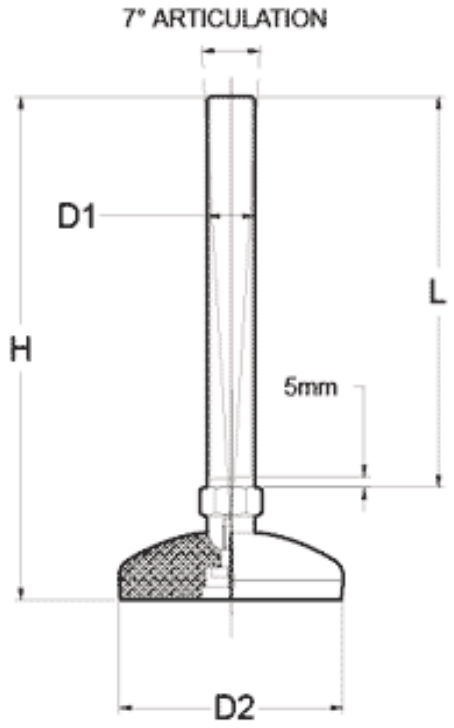
7° ARTICULATION
D1
L
H
5mm
D2