NJ 2312 ECP

Popular item
SKF Explorer

Dimensions

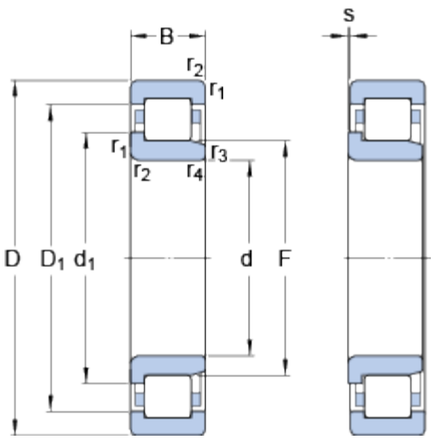

d		60	mm
D		130	mm
B		46	mm
d_1	≈	84.3	mm
D_1	≈	108.6	mm
F		77	mm
$r_{1,2}$	min.	2.1	mm
$r_{3,4}$	min.	2.1	mm
s	max.	3.6	mm

Abutment dimensions

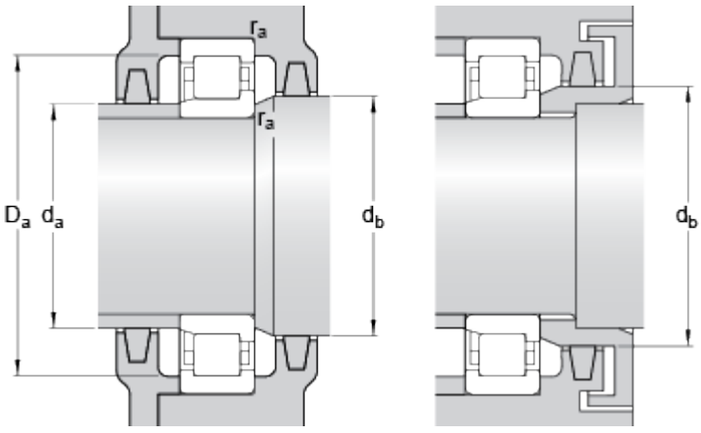

d_a	min.	72	mm
d_a	max.	74	mm
d_b	min.	87	mm
D_a	max.	118.1	mm
r_a	max.	2	mm

Calculation data

Basic dynamic load rating	C	260	kN
Basic static load rating	C_0	265	kN
Fatigue load limit	P_u	34.5	kN
Reference speed		5600	r/min
Limiting speed		6700	r/min
Calculation factor	k_r	0.25	
Limiting value	e	0.3	
Axial load factor	Y	0.4	

Mass

Mass bearing	2.81	kg

Associated products

Angle ring	HJ 2312 EC