SEB 8632

Safety threaded socket

Ø 4mm Safety | 1000 V CAT III | 24 A

- for fixture into panels up to 6 mm thick
- fixed by: slotted nut M12 x 0.75 and spring washer
- hole Ø 12.2+0.1 mm
- fixture using special tool MWZ 8 and MWZ 15

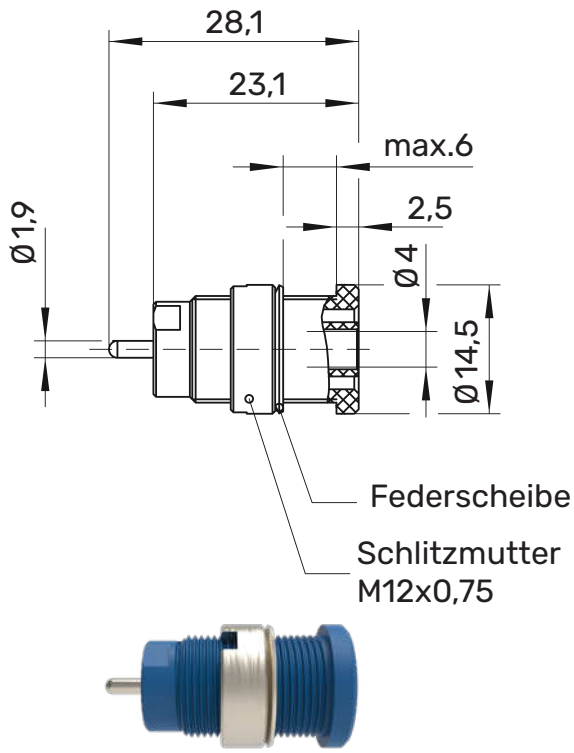

WH 034

MA 007

General information

Order No. [1]	**SEB 8632 Ni ...(colour)**
colours	black, red, blue, yellow, green, grey, brown,white
contact parts	nickel-plated
insulation	PA 6.6 (Polyamid) UL94 - V2

Technical data

terminal	pin Ø 1,9 mm
transition resistance	5 mΩ (Ni)
rated voltage [2]	1000 V CAT III
rated current [2]	24 A
operating temperature	from -25 °C to +80 °C
max. torque	45 Ncm
fastening nut	

[1] other contact platings, colours and terminals on request
[2] at normal ambient temperatures

date: 06.03.2026

Artikelnummern
Article numbers

SCHÜTZINGER

SEB 8632

				Ni
●	SW	Schwarz	Black	99018471
●	RT	Rot	Red	99018472
●	BL	Blau	Blue	99018473
●	GE	Gelb	Yellow	99018474
●	GN	Grün	Green	99018475
●	GR	Grau	Grey	99018476
●	BR	Braun	Brown	99018477
○	WS	Weiß	White	99018478