CA Series
Illuminated Power Rocker Switches

Features/Benefits

- ***15 AMPS @ 125 V AC***
- ***Illuminated actuator***
- ***Various actuator styles***

Typical Applications

- ***Power outlet strips***
- ***Appliances***
- ***Handling and packaging machines***
- ***RoHS compliant***



c UL us

Specifications

CONTACT RATING: 15 AMPS @ 125 V AC; 10 AMPS @ 250 V AC; 1/4 HP @ 125 V AC or 250 V AC.

ELECTRICAL LIFE: 10,000 make-and-break cycles at full load.

LAMP LIFE: 20,000 hours typ.

INSULATION RESISTANCE: 10^9 Ω min.

DIELECTRIC STRENGTH: 1,000 Vrms min. @ sea level.

Materials

HOUSING: 6/6 nylon (UL 94V-2), black.

ACTUATOR: Polycarbonate (UL 94V-2), red.

CONTACTS: Coin silver, silver plated.

OPERATING TEMPERATURE: -30°C to +65°C

NOTE: Specifications and materials listed above are for switches with standard options. For information on specific and custom switches, consult Customer Service Center.

Build-A-Switch

To order, simply select desired option from each category and place in the appropriate box. Available options are shown and described on pages G–103 through G–105. For additional options not shown in catalog, consult Customer Service Center.

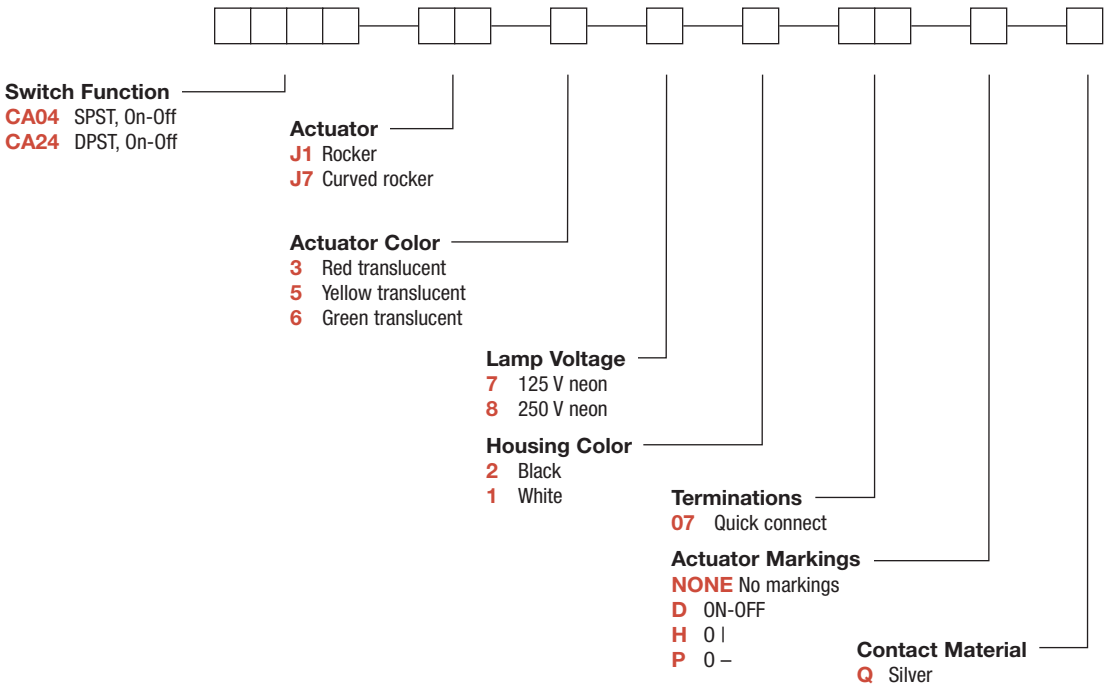

Third Angle Projection

Dimensions are shown: Inches (mm)
Specifications and dimensions subject to change

SWITCH FUNCTION

NO. POLES	MODEL NO.	SWITCH FUNCTION POS. 1	SWITCH FUNCTION POS. 2	CONNECTED TERMINALS POS. 1	CONNECTED TERMINALS POS. 2	SCHEMATIC
SP	CA04	ON	OFF	1-1A	OPEN	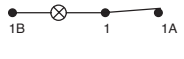 SPST

SPST

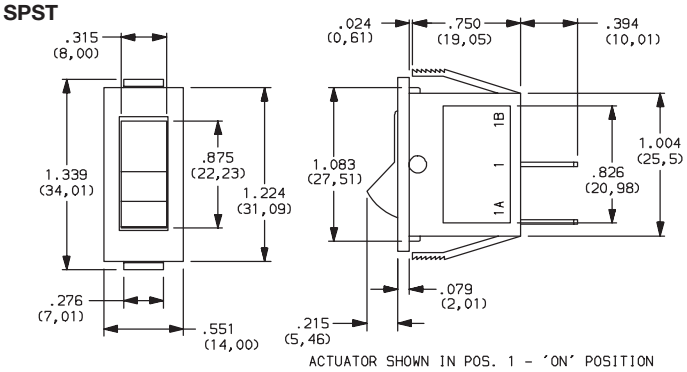

Part number shown: CA04J137207Q

DP	CA24	ON	OFF	1-1A, 2-2A	OPEN	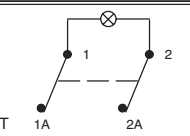

DPST

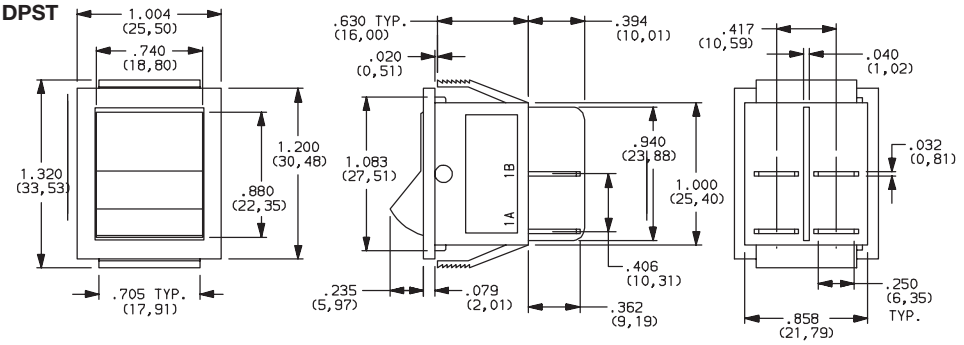

Part number shown: CA24J137207Q

See CONTACT MATERIAL section, page G–105, for complete contact ratings and agency approvals.
Contacts make on side opposite actuator thrown.

All models cULus with all options.

Third Angle Projection

Dimensions are shown: Inches (mm)
Specifications and dimensions subject to change

CA Series
Illuminated Power Rocker Switches

ACTUATOR

J1 ROCKER

SP

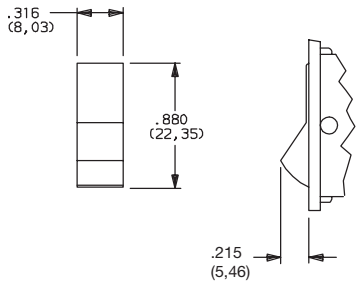

DP

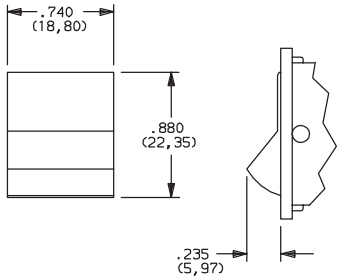

J7 CURVED ROCKER

SP

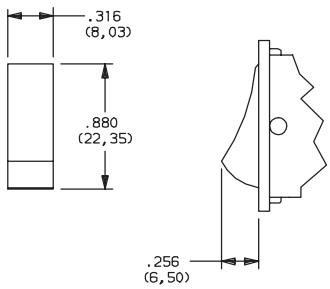

DP

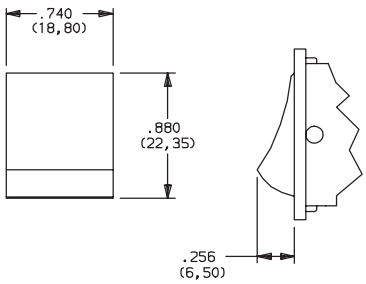

ACTUATOR COLOR

OPTION CODE	ACTUATOR COLOR
3	RED TRANSLUCENT
5	YELLOW
6	GREEN

NOTE: Special colors available, consult Customer Service Center.

NEON LAMP VOLTAGE

7 125 V NEON

8 250 V NEON

HOUSING COLOR

OPTION CODE	HOUSING COLOR
2	BLACK
1	WHITE

NOTE: Housing frame finish: matte. Special colors available, consult Customer Service Center.

Third Angle Projection

Dimensions are shown: Inches (mm)
Specifications and dimensions subject to change

TERMINATIONS

07 QUICK CONNECT

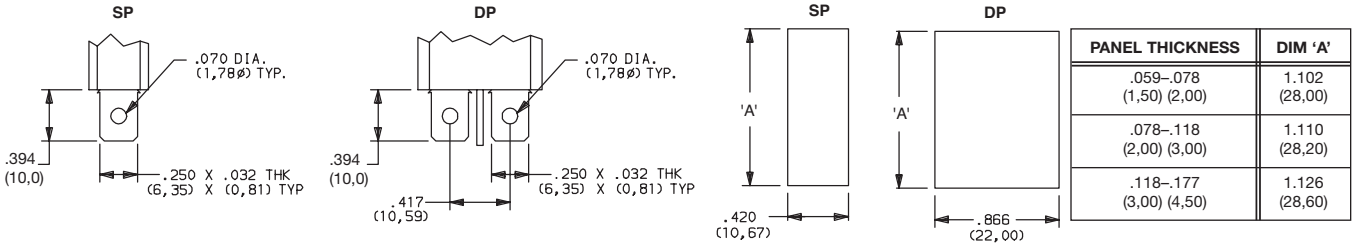

PANEL THICKNESS	DIM 'A'
.059–.078 (1,50) (2,00)	1.102 (28,00)
.078–.118 (2,00) (3,00)	1.110 (28,20)
.118–.177 (3,00) (4,50)	1.126 (28,60)

ACTUATOR MARKINGS

NONE NO MARKING

D ON-OFF

H O I

P O –



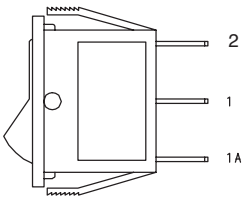

NOTE: Orientation of actuator markings and terminals

Marking color white, standard for all actuator colors except yellow. Marking color black, standard for yellow actuators. Consult Customer Service Center for other available markings and colors.

CONTACT MATERIAL

OPTION CODE	CONTACT AND TERMINAL MATERIAL	RATINGS	
Q	SILVER [1]	POWER	15 AMPS @ 125 V AC; 10 AMPS @ 250 V AC; 1/4 HP @ 125 V AC or 250 V AC (UL/CSA).

* Note: See Technical Data section of this catalog for RoHS compliant and compatible definitions and specifications.

[1] CONTACTS: Coin silver, silver plated.
TERMINALS: Copper, silver plated.

All models cULus with all options.

Third Angle Projection

Dimensions are shown: Inches (mm)
Specifications and dimensions subject to change