Brand of NTN corporation

Technical data

USFLE204

Bearing units



Grey cast housing, radial insert ball bearing with socket set screws, single lip seal

KIT CONTENT

US204G2, FLE204

VISUAL (S)

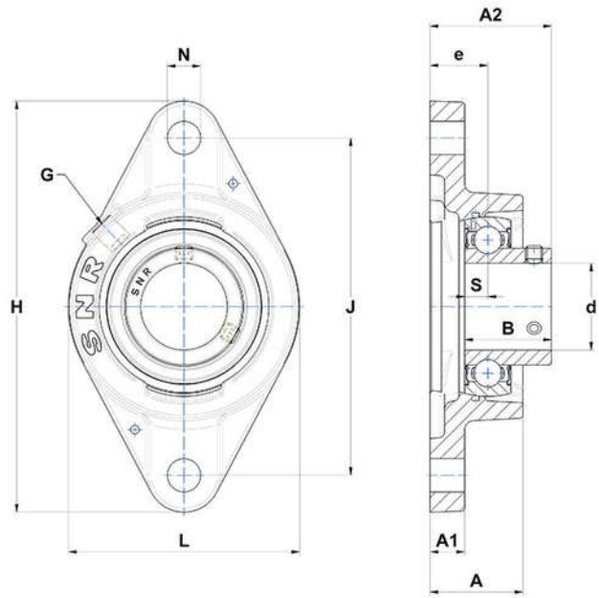

PRODUCT DEFINITION

Brand	SNR
A - Housing height	30,3 mm
A1 - Housing foot height / flange height	10 mm
A2 - Total height from mounting surface	37 mm
B - Width of Inner Ring	25 mm
d - Shaft diameter	20 mm

NTN Europe
1 rue des Usines · BP 2017 · 74010 Annecy Cedex · France · Tel. +33 (0)4 50 65 30 00
S.A. au capital de 322 639 919 € · RCS ANNECY B 325 821 072 · Id. Fiscale : FR 48 325 821 072
SIRET 325 821 072 00015 · Code APE 2815 Z · Code NACE 28.15

USFLE204
Bearing units

PRODUCT DEFINITION	
e - Distance mounting surface to bearing center	19 mm
G - Grease fitting	R1/8"
H - Housing length, width or diameter	112 mm
J - Mounting holes distance	90 mm
L - Housing width / diameter	61 mm
N - Mounting hole dimension	11,5 mm
S - Distance front side/bearing centre	7 mm

PRODUCT PERFORMANCE	
C - Dynamic load rating	12800000 mN
C0 - Static load rating	6650000 mN
Operating temperature min.	253,15 °K
Operating temperature max.	373,15 °K

OTHER FEATURES	
Mass	0,43 kg
Recommended tightening torque for set screw	5.5 N-m