Brand of NTN corporation

Technical data

ESF212

Bearing units



Grey cast housing, radial insert ball bearing with eccentric locking collar, single lip seal

KIT CONTENT

ES212G2, F212

VISUAL (S)

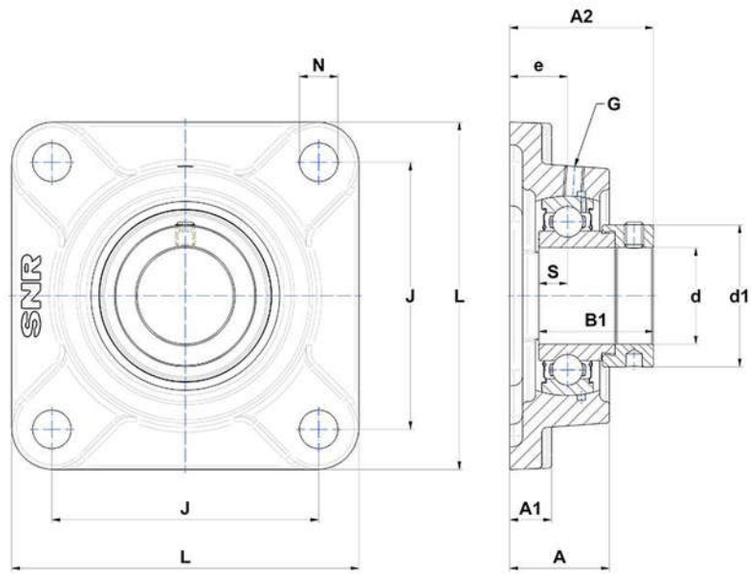

PRODUCT DEFINITION

Brand	SNR
A - Housing height	48 mm
A1 - Housing foot height / flange height	18 mm
A2 - Total height from mounting surface	66,3 mm
B - Width of Inner Ring	33,4 mm
B1 - Overall width Inner Ring	49,3 mm

PRODUCT DEFINITION	
d - Shaft diameter	60 mm
d1 - Outer dia of eccent. Lock. collar / nut of adapter sleeve	82 mm
e - Distance mounting surface to bearing center	29 mm
G - Grease fitting	M6x1
J - Mounting holes distance	143 mm
L - Housing width / diameter	175 mm
N - Mounting hole dimension	19 mm
S - Distance front side/bearing centre	12 mm

PRODUCT PERFORMANCE	
C - Dynamic load rating	52500000 mN
C0 - Static load rating	32800000 mN
Operating temperature min.	253,15 °K
Operating temperature max.	373,15 °K

OTHER FEATURES	
Mass	4,03 kg
Recommended tightening torque for set screw	22 N-m