BExCS110-05 Explosion Proof Alarm & Strobe

The flameproof BExCS110-05 combination alarm horn sounders and Xenon strobe beacons are suitable for Zone 1, 2, 21 & 22. Approved to IECEx, ATEX, Ex EAC and INMETRO standards.

Sound level ouputs are up to 117dB(A) at 1 metre with a choice of 32 alarm tones and 3 remotely selectable stages. Alarm horn & Xenon beacon may be connected from a single power supply for simultaneous operation or from separate supplies for independent operation. The BEx explosion proof Ex d range features enclosures manufactured from corrosion proof, marine grade copper free LM6 aluminium with a chromate and powder coat finish. All models have dual cable entries, large termination areas containing in & out terminals and an ingress protection of IP66/67.

Features

- Marine grade, corrosion proof, LM6 aluminium enclosure
- Automatic synchronisation on multi-beacon & sounder systems.
- Beacons can be set to 'flip-flop' alternating mode with other units on multi-beacon systems.
- Xenon tubes mechanically secured against shock & vibration
- Very large termination area.
- Dual M20 cable entries – adaptors available.
- Stopping plug included.
- Ratchet adjustable stainless steel 'U' bracket.
- Reverse polarity diode fitted.
- IP66/67 ingress protection.
- 120 candela effective light intensity.
- UV stable PC, field replaceable, colour lens filters.
- 'Stage Programmable' version available with 45 tones & 4 remotely selectable stages.



Approvals

- IECEx KEM 10.0025X
- ATEX KEMA 01ATEX2223X
- TR-CU Ex EAC certificate: RU C-GB.AA71.B.00109
- INMETRO certificate: 16-IEx-0034

Coding

- II 2G Ex d IIB T5 Gb Ta. -50°C to +40°C
- II 2G Ex d IIB T4 Gb Ta. -50°C to +70°C
- II 2D Ex tb IIIC T110°C Db Ta. -50°C to +55°C
- II 2D Ex tb IIIC T125°C Db Ta. -50°C to +70°C



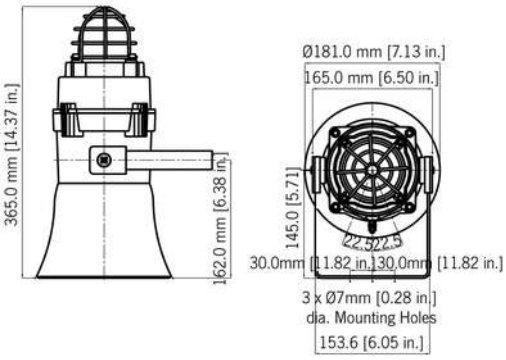

Specification

Alarm Horn Sounder:	
Maximum output:	117dB(A) @ 1 metre [108dB(A) @ 10ft/3m]
Nominal output:	110dB(A) @ 1m +/- 3dB – Tone 2 [101dB(A) @ 10ft/3m]
No. of tones:	32 (UKOOA / PFEER compliant)
No. of stages:	3
Volume control:	Max. 110dB(A); Min. 72dB(A) – Tone 2
Effective range:	100m/328ft @ 1KHz
Voltages DC:	12vdc; 24vdc; 48vdc
Voltages AC:	115vac; 230vac
Stage switching:	Negative or positive
Beacon:	
Energy:	5 Joules (5Ws)
Flash rate:	1Hz (60 fpm)
Peak Candela:	500,000 cd – calculated from energy (J)
Eff. Intensity:	250 cd – calculated from energy (J)
Peak Candela:	39,463 cd* – measured ref. to I.E.S.
Eff. Intensity:	120 cd* – measured ref. to I.E.S.
Lens colours:	Amber, Blue, Clear, Green, Magenta, Red & Yellow
Tube life :	Emissions are reduced to 70% after 5 million flashes
General:	
Ingress protection:	IP66/67
Enclosure matl:	Marine grade copper free LM6 Aluminium
Enclosure finish:	Chromate & powder coated
Horn material:	High impact UL94 V0 & 5VA FR ABS (Red)
Cable entries:	Dual M20 ISO (one stopping plug included)
Terminals:	0.5 – 2.5mm² (20-14 AWG)
Enclosure volume:	<2 litres
Line monitoring:	Blocking diode included EOL Min. 500 Ohm 2w, or 3k3 Ohm 0.5w resistor or diode (DC versions) can be fitted
Temperature range:	-50° to +70°C (-58°F to +158°F)
Relative humidity:	95% – Additional tropicalisation is recommended for applications where both high relative humidity and high ambient temperatures exist
Weight:	DC: 4.80kg/10.56lbs AC: 5.00kg/11lbs

Part Codes

Version:	Part code:	Description:
Product type:	BExCS11005	Explosion proof Alarm Horn Sounder & 5J Xenon Beacon
Type:	DPF	Ex d, UV stable PC Colour Lens, Flare Horn
Voltage:	DC012	12V dc
	DC024	24V dc
	DC048	48V dc
	AC115	115V ac
	AC230	240V ac
Cable Entry Type: [e]	A	2 x M20x1.5mm
	B	2 × 1/2" NPT – adaptors
	C	2 × 3/4" NPT – adaptors
	D	2 x M25x1.5mm – adaptors
	E	1 × 1/2" NPT – adaptor
	F	1 × 3/4" NPT – adaptor
	G	1 x M25x1.5mm – adaptor
Adaptor/Stopping plug material: [m]	B	Brass
	N	Nickel Plated
	S	Stainless Steel
Bracket/Guard matl & tag: [s]	1	A2 304 Stainless Steel
	2	A4 316 Stainless Steel
	3	A2 304 St/St with Equip. Tag
	4	A4 316 St/St with Equip. Tag
Product version: [v]	A1	Default – IECEx, ATEX, Ex EAC & INMETRO
	P1	Stage programmable – IECEx, ATEX, Ex EAC & INMETRO
	T1	Tropicalised – IECEx, ATEX, Ex EAC & INMETRO
Enclosure colour: [x]	R	Red RAL3000
	S	Special – contact E2S
Lens colour: [y]	A	Amber
	B	Blue
	C	Clear
	G	Green
	M	Magenta
	R	Red
	Y	Yellow
Accessories:	SP65-0001-A2	Pole Mount Bracket Kit 2" St/St A2 (304)
	SP65-0001-A4	Pole Mount Bracket Kit 2" St/St A4 (316)
	SP65-0003-A2	Sunshade – St/St A2 (304)
	SP65-0003-A4	Sunshade – St/St A4 (316)

Current Consumption

	Alarm Sounder	Xenon Beacon

Tone table

S 1	Description	S 2	S 3
T 2	Alternating 800/1000Hz at 0.25s intervals	T 17	T 5
T 3	Slow Whoop 500/1200Hz at 0.3Hz with 0.5s gap ...	T 2	T 5
T 4	Sweeping 800/1000 at 1Hz	T 6	T 5
T 5	Continuous at 2400Hz	T 3	T 27
T 6	Sweeping 2400/2900Hz at 7Hz	T 7	T 5
T 7	Sweeping 2400/2900Hz at 1Hz	T 10	T 5
T 8	Siren 500/1200/500Hz at 0.3Hz	T 2	T 5
T 9	Sawtooth 1200/500Hz at 1Hz	T 15	T 2
T 10	Alternating 2400/2900Hz at 2Hz	T 7	T 5
T 11	Intermittent 1000Hz at 0.5Hz General alarm	T 31	T 1
T 12	Alternating 800/1000Hz at 0.875Hz	T 4	T 5
T 13	Intermittent 2400Hz at 1Hz	T 15	T 5
T 14	Intermittent 800Hz 0.25s on 1s off	T 4	T 5
T 15	Continuous at 800Hz	T 2	T 5
T 16	Intermittent 660Hz 150mS on, 150mS off	T 18	T 5
T 17	Alternating 544Hz (100mS)/440Hz(400mS)	T 2	T 27
T 18	Intermittent 660Hz 1.8s on, 1.8s off	T 2	T 5
T 19	1400Hz to 1600Hz sweep up over 1s -1600Hz to ...	T 2	T 5
T 20	Continuous 660Hz	T 2	T 5
T 21	Alternating 554/440Hz at 1Hz	T 2	T 5
T 22	Intermittent 554Hz at 0.875Hz	T 2	T 5
T 23	800Hz pulsing at 2Hz	T 6	T 5
T 24	Sweeping 800/1000Hz at 50Hz	T 29	T 5
T 25	Sweeping 2400/2900Hz at 50Hz	T 29	T 5
T 26	Simulated bell sound	T 2	T 1
T 27	Continuous 554Hz	T 26	T 5
T 28	Continuous 440Hz	T 2	T 5
T 29	Sweeping 800/1000Hz at 7Hz	T 7	T 5
T 30	420Hz repeating 0.625s on, 0.625s off Austral...	T 32	T 5
T 31	1200/500Hz at 1 Hz Prepare to Abandon Platform	T 11	T 1
T 32	Sweeping 500/1200Hz 3.75s on, 0.25s off 15Hz	T 26	T 1

No liability is accepted for any consequence of the use of this document. The technical specification of this unit is subject to change without notice due to our policy of continual product development. All dimensions are approximate. This unit is sold subject to our standard conditions of sale, a copy of which is available on request.