LW2720

Continuous level sensor

NON-CONTACT LEVEL TRANSMITTER

An IO-Link master and a parameter setting software (e.g. moneo or LR DEVICE) are required for initial set-up.

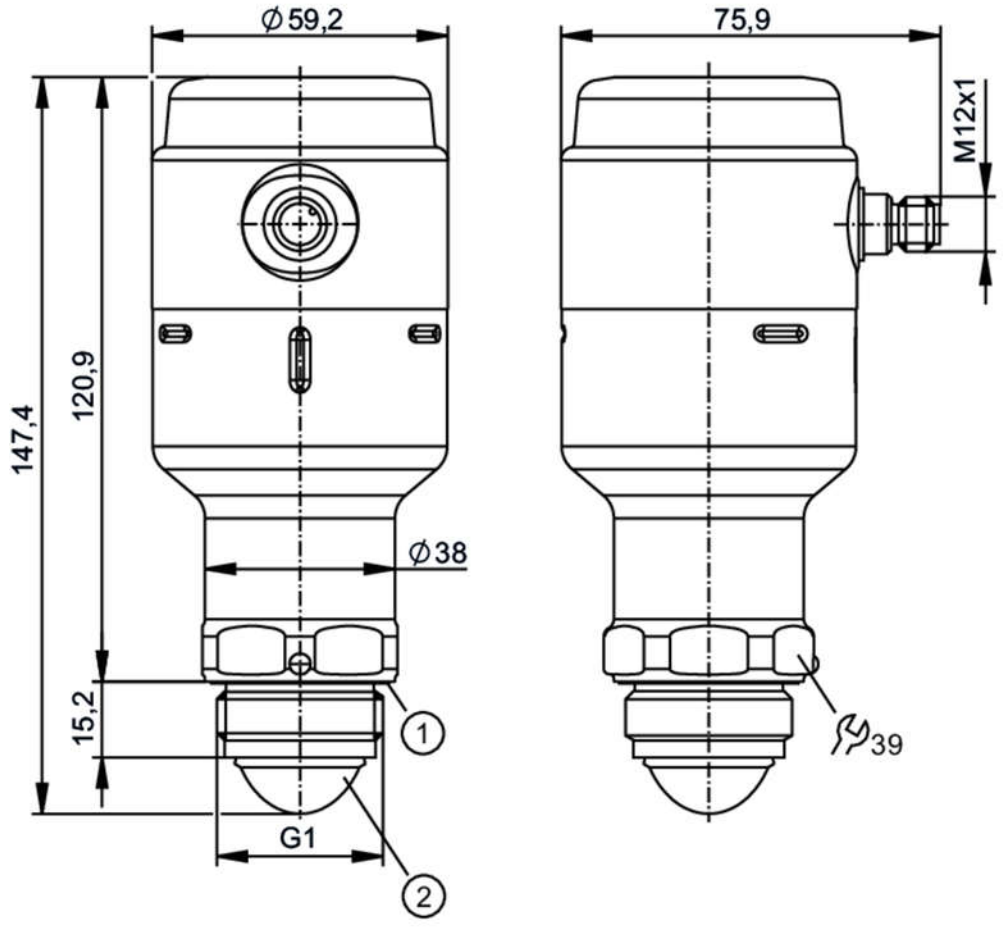

1 Sealing
2 antenna

Product characteristics		
Number of inputs and outputs		Number of digital outputs: 1; Number of analogue outputs: 1
Process connection		G 1 Aseptoflex Vario
Application		
Special feature		Gold-plated contacts
Dielectric constant of the medium		≥ 2
Recommended media		water; hydrous media
Medium temperature	[°C]	-40...150; (see diagram:)
Maximum speed of the change of level	[mm/s]	200
Pressure rating	[bar]	8
Note on pressure rating		0 bar at medium temperature < - 20 C
Vacuum resistance	[mbar]	-1000
MAWP (for applications according to CRN)	[bar]	8

LW2720

Continuous level sensor

NON-CONTACT LEVEL TRANSMITTER

Radio approval for		EU/RED; United Kingdom; South Korea; USA; Canada; Australia; New Zealand; Vietnam; Singapore; Argentina
Note on radio approval		The list of countries applying the European Radio Equipment Directive 2014/53/EU (RED) can be found under “Downloads”.
Electrical data		
Operating voltage	[V]	18...30 DC
Current consumption	[mA]	< 80
Protection class		III
Reverse polarity protection		yes
Power-on delay time	[s]	< 15
Measuring principle		FMCW (80 GHz technology); frequency range 77 - 81 Hz
Inputs / outputs		
Number of inputs and outputs		Number of digital outputs: 1; Number of analogue outputs: 1
Outputs		
Total number of outputs		2
Output signal		switching signal; analogue signal; IO-Link
Electrical design		PNP/NPN
Number of digital outputs		1; (2 parameterisable)
Output function		normally open / normally closed; (parameterisable)
Max. voltage drop switching output DC	[V]	2.5
Permanent current rating of switching output DC	[mA]	50
Number of analogue outputs		1
Analogue current output	[mA]	4...20, invertible; (scalable)
Max. load	[Ω]	43,5 * (Ub – 18) + 600 Ω
Short-circuit protection		yes
Type of short-circuit protection		pulsed
Overload protection		yes
Measuring/setting range		
Measuring range	[m]	10; (see diagram:)
Sampling rate	[Hz]	> 3
Accuracy / deviations		
Accuracy		± 2 mm
Resolution	[mm]	1
Zero signal (current)	[mA]	3.8
Full signal (current)	[mA]	20.5
Temperature drift per 10 K		± 1 mm
Response times		
Response time	[ms]	330
Interfaces		
Communication interface		IO-Link
Transmission type		COM2 (38,4 kBaud)
IO-Link revision		1.1

LW2720

Continuous level sensor

NON-CONTACT LEVEL TRANSMITTER

SDCI standard		IEC 61131-9	
Profiles		Smart Sensor ED2: SSCs (0x8001), Measuring Sensor (0x000A)	
SIO mode		yes	
Required master port type		A	
Process data analogue		1	
Process data binary		2	
Min. process cycle time	[ms]	6	
Supported DeviceIDs		**Type of operation**	**DeviceID**
		default	1324

Operating conditions

Ambient temperature	[°C]	-40...80	
Note on ambient temperature		see diagram:	
Storage temperature	[°C]	-40...90	
Protection		IP 68; IP 69K	

Tests / approvals

EMC		DIN EN 61326-1	group 1: Class A (IO-Link active); B (IO-Link not active, with analogue and switching outputs)
Shock resistance		DIN EN 60068-2-27	50 g (11 ms) / 20 g (6 ms)
Vibration resistance		IEC 61298-3	2 g (10...1000 Hz)
MTTF	[years]	330	

Mechanical data

Weight	[g]	727.15
Materials		stainless steel (316L/1.4404); PA; FKM; FVMQ
Materials (wetted parts)		PTFE; EPDM
Process connection		G 1 Aseptoflex Vario
Surface characteristics Ra/Rz of the wetted parts		< 0.76

Remarks

Notes	An IO-Link master and a parameter setting software (e.g. moneo or LR DEVICE) are required for initial set-up.
Pack quantity	1 pcs.

Electrical connection

Connector: 1 x M12; coding: A; Contacts: gold-plated



LW2720

Continuous level sensor

NON-CONTACT LEVEL TRANSMITTER

Connection

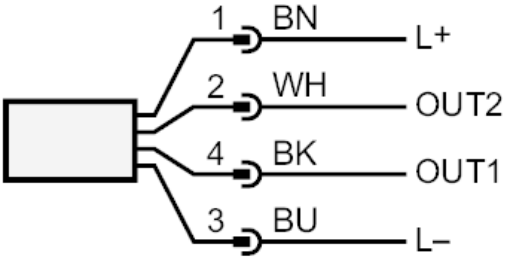

OUT1:	switching output IO-Link
OUT2:	switching output analogue output
	colours to DIN EN 60947-5-2
	Core colours :
BK =	black
BN =	brown
BU =	blue
WH =	white

LW2720

Continuous level sensor

NON-CONTACT LEVEL TRANSMITTER

Diagrams and graphs

Angle of radiation

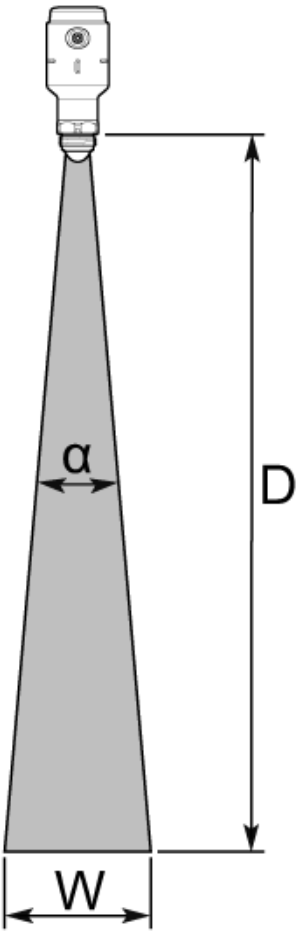

Angle of radiation (α): 10°

distance (D) 2 m - Beam width (W) 0.4 m

distance (D) 4 m - Beam width (W) 0.7 m

distance (D) 6 m - Beam width (W) 1.1 m

distance (D) 8 m - Beam width (W) 1.4 m

distance (D) 10 m - Beam width (W) 1.8 m

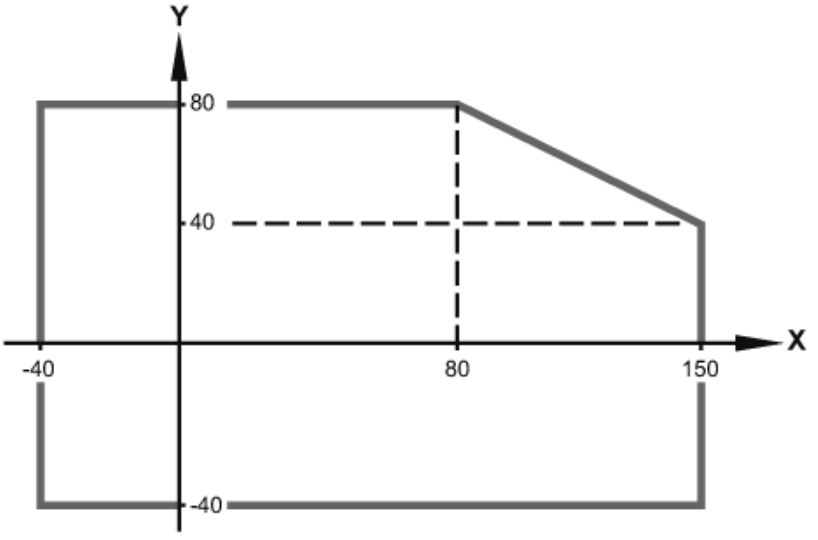

X process temperature °C

Y Ambient temperature °C

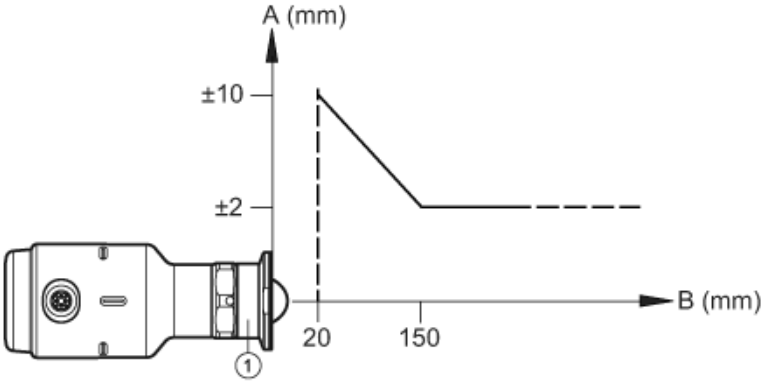

1 Adapter example E33208

A accuracy

B distance