PRODUCT DETAILS

ARTICLE: 19878FR

WHEEL A 100X30/40 RB SWIVEL FORK P60L/50 + BRAKE



Wheel series A

Wheels with cast polyurethane coating 95 Sh.A on polyamide 6 center.
Wheel fitted with standard roller bearing.

Castor series P60

P60 series, heavy duty pressed steel forks, swivel with hardened steel double races & 'water resistant' protections. Finish: zincplated.
Trailing foot brake - total stop.

Technical data

Wheel diameter	D	100 mm
Tyre width	E	30,0 mm
Bore diameter	d	15 mm
Weight article		1,570 kg
Hub width	L	40 mm
Overall height	H	137 mm
Top plate outer dimensions	AxB	105x85 mm
Bolt hole spacing	axb	76x55 mm
Bolt hole spacing	axb	80x60 mm
Fixing bolt diameter	g	M8
Offset	F	42 mm
Fork width	U	50 mm
Load Capacity		200 kg

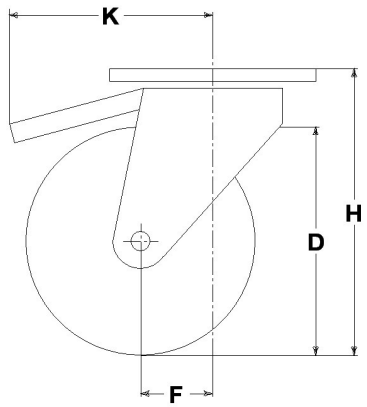

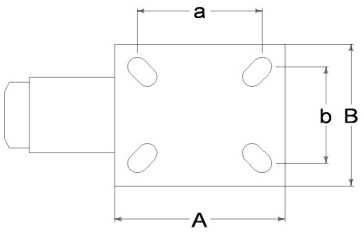

Related Articles

Spare part wheel: 4511
Basic version: 19878

GENERAL INFORMATION / RECOMMENDATIONS AND WARNINGS
The cited text and the complete catalogue in their most up-dated versions are available in the OEM's website page www.lagspa.it/downloads. The dimensions, descriptions, specifications and illustrations herein are indicative and subject to variations without notice. The fact that products are illustrated herein does not necessarily imply they are available from stock nor does it place us under any obligation to supply them.
Tests carried out refer to the original products with original accessories: the replacement of one of the components with others of different manufacture might prevent the same results from being achieved and will automatically invalidate any guarantee. Please contact our technical service concerning any special application.