MOSA M12 FEMALE 90° FIELD-WIREABLE (IDC)

3-pol. 0.25…0.5mm²

Female 90°
3-pole
Connection cross section: 0.25...0.5 mm²
Art.-No. 7005 - M12 Lite - (plastic hexagonal screw) on request

The resistance to aggressive media should be individually tested for your application. Further details on request.

Link to Product

Illustration



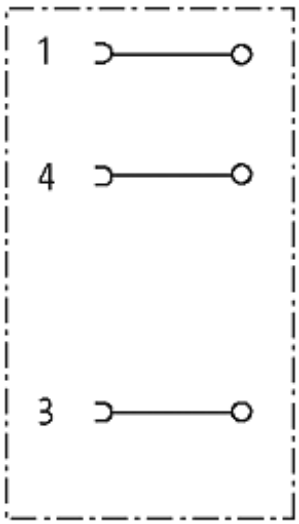

The information in this brochure has been compiled with the utmost care.
Liability for the correctness completeness and topicality of the information is restricted to gross negligence. Version: 02/16

MURR ELEKTRONIK
stay connected

Female

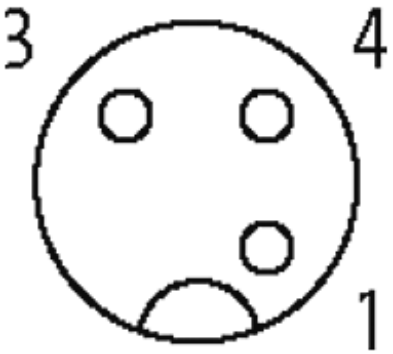

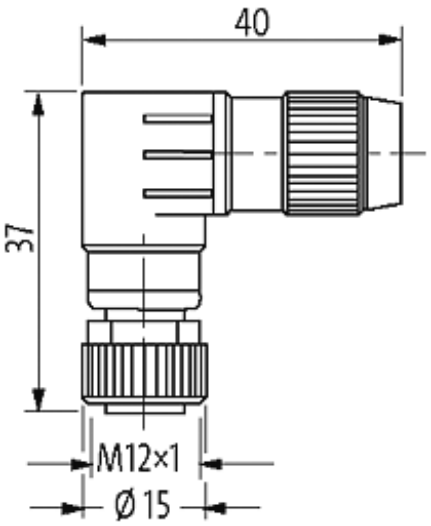

Product may differ from Image

Approvals

Form

Form	12661

Technical Data

Operating voltage	max. 32 V AC/DC
Operating current per contact	max. 4 A
Connection cross section	0.25...0.5 mm² (conductor diameter min. 0.1 mm)
Sealing range (cable Ø)	4...5.1 mm
Wire isolation	PVC, PP, TPE
Outer wire Ø	1.2...1.6 mm
Locking of ports	Screw thread M12 × 1 mm (recommended torque 0.6 Nm) self-

The information in this brochure has been compiled with the utmost care.
Liability for the correctness completeness and topicality of the information is restricted to gross negligence. Version: 02/16

Locking of ports	securing
Protection	IP67 inserted and tightened (EN 60529)
General data	
Temperature range	-25...+85 °C
Dimensions H × W × D	37×40×15 mm
Commercial data	
country of origin	DE
customs tariff number	85369010
minimum order quantity	1

The information in this brochure has been compiled with the utmost care.
Liability for the correctness completeness and topicality of the information is restricted to gross negligence. Version: 02/16