NOTES:

1. DRAWING TO BE INTERPRETED IN ACCORDANCE WITH THE CURRENT REVISION OF ASME Y14.5.
2. THIS PART/PRODUCT IS TO BE MANUFACTURED WITH THE LATEST APPLICABLE REGULATIONS OF EC DIRECTIVES FOR THE RESTRICTION OF THE USE OF HAZARDOUS SUBSTANCES IN ELECTRICAL AND ELECTRONIC EQUIPMENT (ROHS), WASTE ELECTRICAL AND ELECTRONIC EQUIPMENT (WEEE) AND REGISTRATION, EVALUATION, AUTHORIZATION AND RESTRICTION OF CHEMICALS (REACH).
3. BUTTON IS FREE TO ROTATE & ANY ROTATIONAL FORCE APPLIED TO BUTTON IN EXCESS OF 20 IN. OZS. MAY RESULT IN INTERNAL SWITCH DAMAGE.

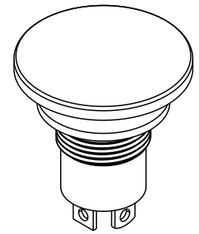

SCALE 1:1

P1-90266			
REV	OCN #	DATE	APR
A	082082	24 MAR 16	TAO

CHARACTERISTICS:

ELECTRICAL:

RATINGS	SEA LEVEL	
LOAD	28 VDC	115 VAC
RESISTIVE	10 AMPS	10 AMPS
INDUCTIVE	5 AMPS	5 AMPS
LAMP	3 AMPS	3 AMPS
DWV	1050 VRMS	

ELECTRICAL LIFE: 25,000 CYCLES AT FULL LOAD

MECHANICAL:

TOTAL TRAVEL: .085±.015
OVER TRAVEL: .012 MIN.
OPERATING FORCE: 4.0 ± 1.0 LBS.
RESET FORCE: 1.0 LB. MIN.
MECHANICAL LIFE: 250,000 CYCLES

PHYSICAL:

BUTTON: RED ANODIZED ALUMINUM ALLOY
CASE: BLACK ANODIZED ALUMINUM ALLOY
ENCLOSURE DESIGN: ISO 20653, IP6K8S – DUSTTIGHT, CONTINUOUS IMMERSION , 1 METER FOR 31 MINUTES, STATIONARY DURING TEST(S)
TEMPERATURE RANGE: -55° C TO +85° C

MARKING:

P1-90266
DATE CODE (YYWW)
& TERM. IDENT.

MOUNTING HARDWARE:

HEX NUT, LOCKWASHER & PANEL SEAL GASKET

TERMINAL HARDWARE:

NONE.

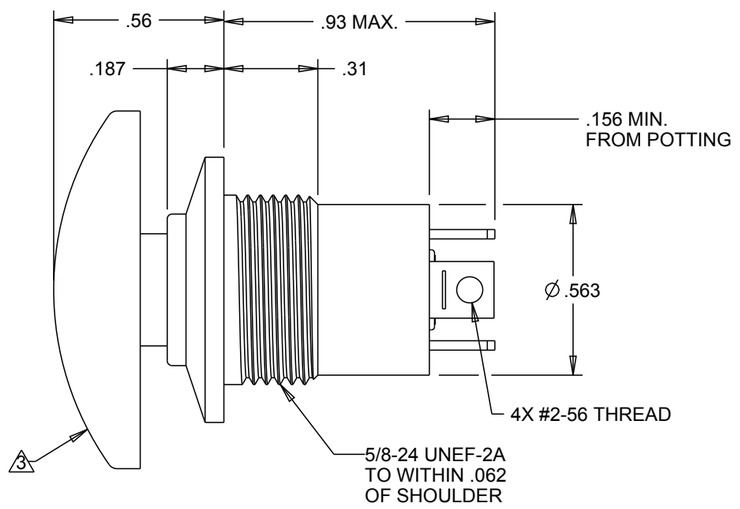

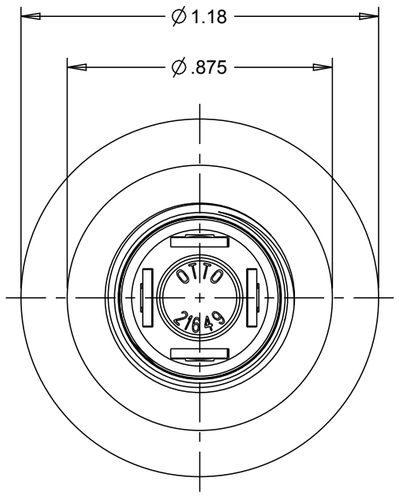

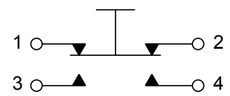

SPDT-DB
SCHEMATIC

KEY CHARACTERISTICS

SR SPECIAL REQUIREMENT

UNLESS OTHERWISE SPECIFIED: DIMENSIONS ARE IN INCHES.
TOLERANCES:
.XX ±.03
.XXX ±.010
ANGLES ±2°
DO NOT SCALE

OTTO®
CARPENTERSVILLE, ILLINOIS USA

THIS DOCUMENT IS THE CONFIDENTIAL PROPERTY OF OTTO ENGINEERING, INC.. IT IS NOT TO BE USED IN ANY WAY DETRIMENTAL TO THE INTERESTS OF OTTO ENGINEERING, INC..

DESCRIPTION
P1, PUSHBUTTON SWITCH
"C" CASE, Ø1.18 BUTTON

DRWN. OR	SIZE	FSCM NO	DRAWING NO.	REV.
CHKD. TAO	B	21649	P1-90266	A
APPD. SPM				
		THIRD ANGLE PROJECTION	Scale 2:1	Sheet 1 OF 1