KI5209

Capacitive sensor

KI-3015-FPKG/NI/0,10M/PH/US100

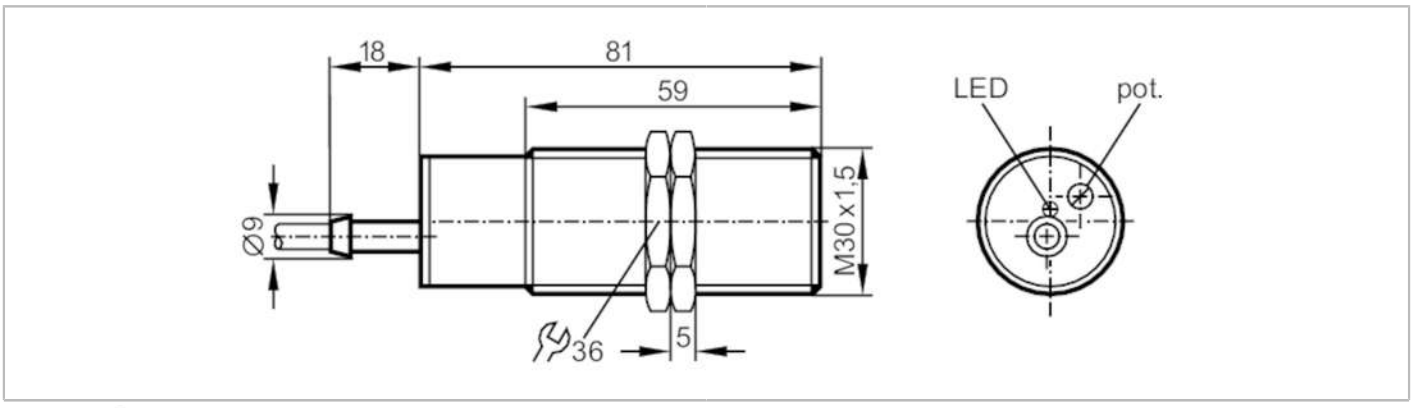

Product characteristics		
Electrical design		PNP
Output function		normally open / normally closed; (selectable)
Sensing range	[mm]	3...15
Housing		threaded type
Dimensions	[mm]	M30 x 1.5 / L = 81
Electrical data		
Operating voltage	[V]	10...36 DC
Current consumption	[mA]	< 15
Protection class		II
Reverse polarity protection		yes
Outputs		
Electrical design		PNP
Output function		normally open / normally closed; (selectable)
Max. voltage drop switching output DC	[V]	2.5
Permanent current rating of switching output DC	[mA]	250
Short-time current rating of switching output	[mA]	250
Switching frequency DC	[Hz]	40
Short-circuit proof		yes
Overload protection		yes
Detection zone		
Sensing range	[mm]	3...15
Sensing range adjustable		yes
Factory setting sensing range	[mm]	15
Real sensing range Sr	[mm]	15 ± 10 %
Operating distance	[mm]	0...12.1
Accuracy / deviations		
Correction factor		glass: 0.4 / water: 1 / ceramics: 0.2 / PVC: 0.2
Hysteresis	[% of Sr]	1...15

KI5209

Capacitive sensor

KI-3015-FPKG/NI/0,10M/PH/US100

Switch point drift	[% of Sr]	-15...15
Operating conditions		
Ambient temperature	[°C]	-25...80
Protection		IP 65
Tests / approvals		
MTTF	[years]	692
Mechanical data		
Weight	[g]	102.5
Housing		threaded type
Mounting		non-flush mountable
Dimensions	[mm]	M30 x 1.5 / L = 81
Thread designation		M30 x 1.5
Materials		PBT
Displays / operating elements		
Display	switching status	1 x LED, red
Accessories		
Items supplied		lock nuts: 2
		screwdriver: 1
Remarks		
Pack quantity		1 pcs.
Electrical connection - plug		

Cable: 0.1 m, PUR

Connector: 1 x M12; coding: A



