DATASHEET



PS116-Z12-STR-K240

- Snap action 1 Normally open contact (NO) / 2 Opener (NC)
- connector plug M12, right
- Thermoplastic enclosure
- Symmetric enclosure
- Protection class IP66, IP67
- Actuator heads can be repositioned by 8 x 45°

Data

Ordering data

Product type description	PS116-Z12-STR-K240
Article number (order number)	103006629
EAN (European Article Number)	4030661442600
eCl@ss number, version 12.0	27-27-26-01
eCl@ss number, version 11.0	27-27-26-01
eCl@ss number, version 9.0	27-27-26-01
ETIM number, version 7.0	EC000030
ETIM number, version 6.0	EC000030

Approvals - Standards

Certificates	cULus CCC

General data

Standards	EN IEC 60947-5-1
Housing construction form	Norm construction design
Actuator type to EN 50047	e

Housing material	Plastic, glass-fibre reinforced thermoplastic, zinc die-cast, chromated
Active area	Metal film
Gross weight	64 g

General data - Features

Safety functions	Yes
Number of auxiliary contacts	1
Number of safety contacts	2

Safety classification

Standards	EN ISO 13849-1
B_{10D} Normally-closed contact (NC)	20,000,000 Operations
B_{10D} Normally-open contact (NO)	1,000,000 Operations
Note	at 10% I_e and ohmic load
Mission time	20 Year(s)

Mechanical data

Actuating element	Angle roller lever K240
Roller material	Plastic
Mechanical life, minimum	10,000,000 Operations
Actuating force, minimum	6 N
Positive break force, minimum	40 N
Actuating speed, minimum	10 mm/min
Actuating speed, maximum	1 m/s
Actuating torque, minimum	0.2 Nm
Positive break torque	0.6 Nm

Mechanical data - Connection technique

Connector position	Right

Termination	Connector M12, 6-pole
Wire cross-section	0.5 mm^2

Mechanical data - Dimensions

Length of sensor	16.6 mm
Width of sensor	31 mm
Height of sensor	95.5 mm
Diameter of Castor	22 mm

Ambient conditions

Degree of protection	IP66 IP67
Ambient temperature	-30 ... +80 °C
Protection class	II

Ambient conditions - Insulation values

Rated insulation voltage U_i	300 V
Rated impulse withstand voltage U_{imp}	4 kV
Degree of pollution	3

Electrical data

Required rated short-circuit current	400 A
Utilisation category AC-15	240 VAC
Utilisation category AC-15	3 A
Utilisation category DC-13	24 VDC
Utilisation category DC-13	1.5 A
Switching element	1 NO contact, 2 NC contacts
Switching principle	Snap action
Bounce duration, maximum	3 ms
Maximum switching frequency	5,000 /h

Switchover time, maximum	5.5 ms
Material of the contacts, electrical	Silver

Ordering code

Product type description:
PS116-(1)-(2)-(3)-(4)

(1)

Z11	Snap action 1 NO contact / 1 NC contact
Z02	Snap action 2 NC contacts
Z12	Snap action 1 NO contact / 2 NC contact
Z11R	Snap action 1 NO contact / 1 NC contact with latching
Z02R	Snap action 2 NC contacts with latching
Z12R	Snap action 1 NO contact / 2 NC contact with latching
T11	Slow action 1 NO contact / 1 NC contact
T02	Slow action 2 NC contacts
T20	Slow action 2 NO contact
T12	Slow action 1 NO contact / 2 NC contact
T21	Slow action 2 NO contact / 1 NC contact
T03	Slow action 3 NC contacts
T11UE	Slow action 1 NO contact / 1 NC contact with overlapping contacts
T02H	Slow action 2 NC contacts with staggered contacts

(2)

L200	Connecting cable bottom, cable length 2 m
LR200	Connecting cable right, cable length 2 m
LR300	Connecting cable right, cable length 3 m
LR500	Connecting cable right, cable length 5 m
ST	Connector plug M12 - plastic - bottom
STR	Connector plug M12, right

(3)

S200	plunger S200 Ø 6 mm

R200	Roller plunger R200
K200	Offset roller lever - plastic roller- width 5.3 mm - Ø 12 mm
K210	Offset roller lever - plastic roller- width 5mm - Ø 14mm
K230	Angle roller lever - plastic roller Ø 14 mm
K240	Angle roller lever with plastic roller Ø 22 mm - right-bent
K250	Angle roller lever with plastic roller Ø 22 mm - left-bent
H200	Roller lever - plastic roller Ø 16 m - lever length 24 mm
N200	Roller lever 2 mm Toothing (24...26mm) - Plastic roller Ø 20 mm - Width 9.8 mm
J200	Rod lever - plastic - 200mm -Ø 6mm

(4)

0	Material Castor/Lever: Plastic
1	Material Castor/Lever: Stainless steel
2	Material Castor/Lever: Brass
3	Material Castor/Lever: Aluminium
4	Material Castor/Lever: Steel

Pictures

Product picture (catalogue individual photo)



ID: kps1kf24
| 679.3 kB | .jpg | 352.778 x 518.936 mm - 1000 x 1471 px - 72 dpi
| 46.9 kB | .png | 74.083 x 109.008 mm - 210 x 309 px - 72 dpi
| 41.0 kB | .jpg | 83.961 x 123.472 mm - 238 x 350 px - 72 dpi

Dimensional drawing basic component

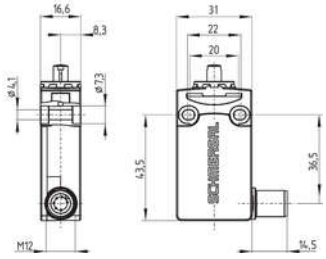

ID: kps11g01
| 224.3 kB | .ai | 200 x 200 mm - 566 x 566 px - 72 dpi
| 4.8 kB | .png | 74.083 x 58.561 mm - 210 x 166 px - 72 dpi
| 132.8 kB | .jpg | 352.778 x 279.047 mm - 1000 x 791 px - 72 dpi

Dimensional drawing actuator

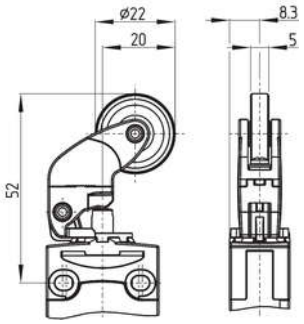

ID: kps11b07
| 410.7 kB | .ai | 110.124 x 108.395 mm - 312 x 307 px - 72 dpi
| 5.6 kB | .png | 74.083 x 73.025 mm - 210 x 207 px - 72 dpi
| 221.1 kB | .jpg | 352.778 x 376.767 mm - 1000 x 1068 px - 72 dpi

Switch travel diagram

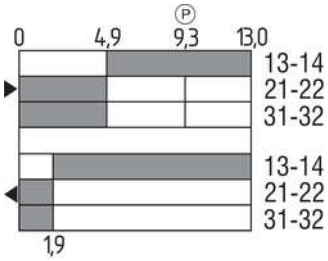

ID: kps11s39
| 2.7 kB | .png | 74.083 x 58.914 mm - 210 x 167 px - 72 dpi
| 106.5 kB | .jpg | 352.778 x 280.458 mm - 1000 x 795 px - 72 dpi

Diagram

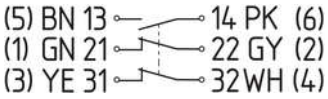

ID: kps16k03
| 85.8 kB | .jpg | 352.778 x 97.367 mm - 1000 x 276 px - 72 dpi
| 4.0 kB | .png | 74.083 x 20.461 mm - 210 x 58 px - 72 dpi

Diagram

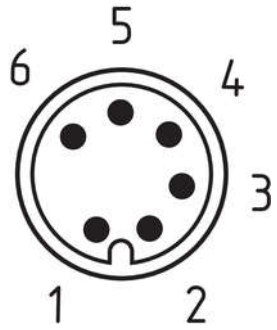

ID: km12-k6e
| 1.3 MB | .cdr |
| 130.2 kB | .jpg | 352.778 x 386.292 mm - 1000 x 1095 px - 72 dpi
| 4.7 kB | .png | 73.731 x 80.786 mm - 209 x 229 px - 72 dpi

Contact arrangement

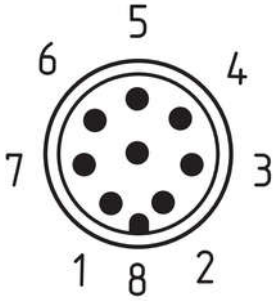

ID: km12-k8b
| 5.3 kB | .png | 73.731 x 87.489 mm - 209 x 248 px - 72 dpi
| 138.6 kB | .jpg | 352.425 x 417.689 mm - 999 x 1184 px - 72 dpi

Schmersal India Pvt. Ltd., Plot No - G-7/1, Ranjangaon MIDC, Tal. - Shirur, Dist.- Pune 412 220
The details and data referred to have been carefully checked. Images may diverge from original. Further technical data can be found in the manual. Technical amendments and errors possible.
Generated on: 26/12/2024, 11:11 am