Incremental Shaft Encoders Type RI 32

Economy Types



- Replacement for type RIS and RI 31
- The economical encoder for small appliances
- High efficiency by means of ball bearing
- Small torque
- Application e.g.
  - laboratory equipment
  - training equipment
  - crimping machines
  - tampon printing machines
  - miniature grinding machines

NUMBER OF PULSES

5 / 10 / 20 / 25 / 30 / 50 / 60 / 100 / 120 / 128 / 200 / 250 / 256 / 288 / 300 / 360 / 400 / 500 / 512 / 600 / 720 / 900 / 1,000 / 1,024 / 1,250 / 1,500
Other numbers of pulses available on request

TECHNICAL DATA
mechanical

Shaft diameter	5 mm / 6 mm
Absolute max. shaft load	radial 30 N (6.5 lbs), axial 15 N (3.3 lbs)
Absolute maximum speed	max. 6,000 RPM
Torque	≤ 0.05 Ncm
Protection class (EN 60529)	Housing IP 50, bearings IP 40
Operating temperature	–10 ... +60 °C
Storage temperature	–25 ... +85 °C
Vibration proof (IEC 68-2-6)	100 m/s² (10 ... 2,000 Hz)
Shock resistance (IEC 68-2-27)	1,000 m/s² (6 ms)
Type of connection	1.5 m cable axial/radial [1]
Material	Housing: plastic; Flange: aluminium
Flange	Round flange
Weight	ca. 50 g
Bearing life	2.4 x 109 revolutions (typ.) at 35 % of full rated shaft load 2.4 x 108 revolutions (typ.) at 75 % of full rated shaft load 2.4 x 107 revolutions (typ.) at 100 % of full rated shaft load For example 10,000 h at 4,000 RPM with a 2 lb radial load

[1] Other cable length on request

TECHNICAL DATA
electrical

General design	as per DIN VDE 0160, protection class III, contamination level 2, overvoltage class II
Supply voltage (SELV)	with push-pull (D): 5 VDC ± 10 % with push-pull (K): 5 VDC [1] ± 10 % oder 10 ... 30 VDC [1]
Power consumption	40 mA (5 VDC), 60 mA (10 VDC), 30 mA (24 VDC)
Standard- Output versions [2]	push-pull (K, D): A, B, N, $\overline{\text{Alarm}}$

[1] Pole protection
[2] Output description and technical data see section „Output".

Incremental Shaft Encoders Type RI 32

Economy Types

DIMENSIONED DRAWING

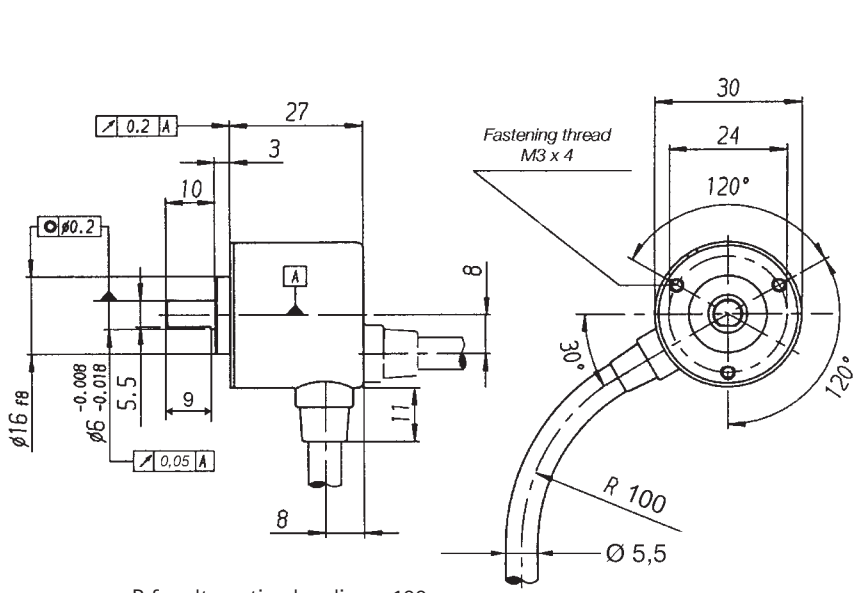

R for alternating bending > 100 mm
R for permanent bending > 40 mm

CONNECTION DIAGRAM

Description (push-pull)	Lead Ø mm²	Colour
5 VDC/10-30 VDC	0,5	red
Channel A	0,14	white
Channel B	0,14	green
Channel N	0,14	yellow
GND	0,5	black
$\overline{\text{Alarm}}$	0,14	yellow/black

ORDERING DATA

O Standard

Supply voltage
A 5 VDC
E 10 ... 30 VDC [3]

Type of flange
R round flange

Shaft diameter
1 6 mm [1]
4 5 mm [2]

R I 3 2 – 0 / ☐ ☐ R · 1 ☐ ☐ ☐

Number of pulses
5 ... 1500

Protection class
1 IP 40

Output
K push-pull [4] short circuit proof
D push-pull 5 V, ± 30 mA

Type of connection
A cable axial
B cable radial

[1] flattened, see dimensioned drawing
[2] not flattened
[3] only with output K
[4] ± 10 mA at 5 V, ± 30 mA at 10 ... 30 V