Brand of NTN corporation

Technical data

UKP322H

Bearing units



Grey cast housing, radial insert ball bearing with adapter sleeve,seal with slinger

KIT CONTENT

UK322G2H, P322

VISUAL (S)

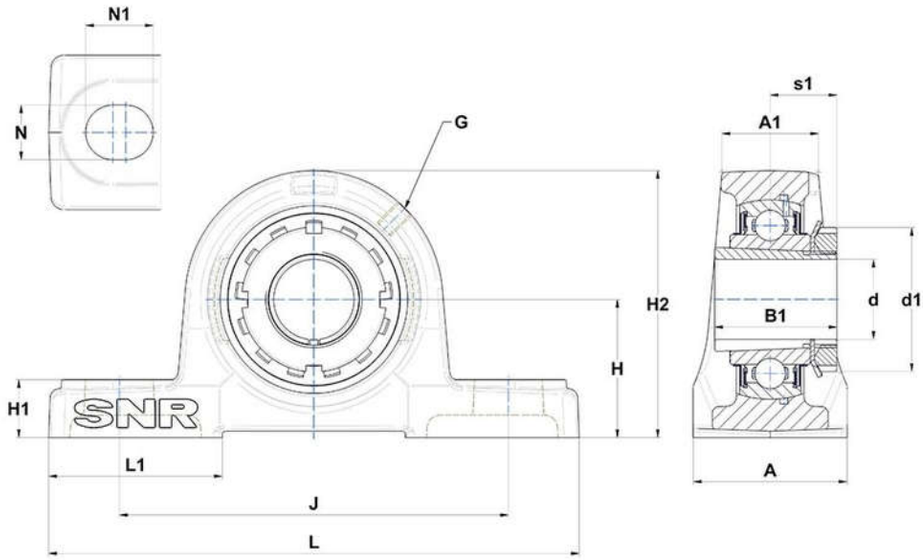

PRODUCT DEFINITION

Brand	SNR
A - Housing width	140 mm
A1 - Housing top width	83 mm
B - Width of Inner Ring	80 mm
d - Shaft diameter	100 mm
d1 - Outer dia of eccent. Lock. collar / nut of adapter sleeve	145 mm

UKP322H
Bearing units

PRODUCT DEFINITION	
G - Grease fitting	M10x1
H - Distance mounting base to centerline spheric. seating diam.	150 mm
H1 - Housing foot height	55 mm
H2 - Housing height	300 mm
J - Mounting holes distance	400 mm
L - Housing length	520 mm
L1 - Housing foot length	135 mm
N - Mounting hole dimension	40 mm
N1 - Mounting hole length	55 mm
s1 - Distance nut to middle of bearing raceway	61 mm

PRODUCT PERFORMANCE	
C - Dynamic load rating	205000000 mN
C0 - Static load rating	178000000 mN
Operating temperature min.	253,15 °K
Operating temperature max.	373,15 °K

OTHER FEATURES	
Mass	48,3 kg
Adapter sleeve designation	H2322