Trunnion mounting MT4, Series CM1

1827003994

AVENTICS Trunnion mountings

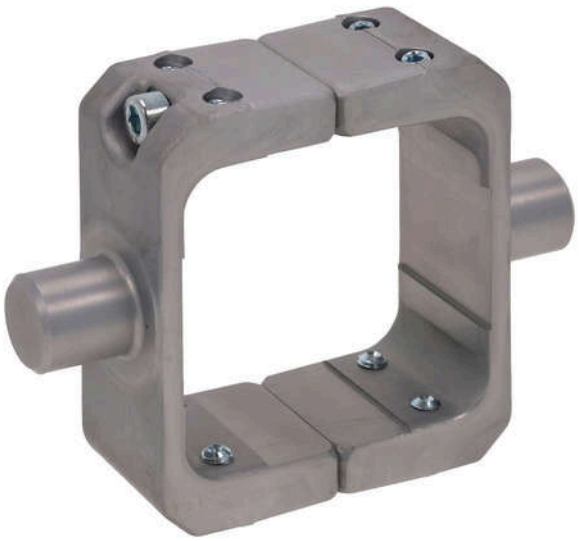

Technical data

Industry	Industrial
For series	PRA
Piston diameter	63 mm
Axle pivot Ø	20 mm

Material

Housing material	Aluminum
Surface housing	forged
Part No.	1827003994

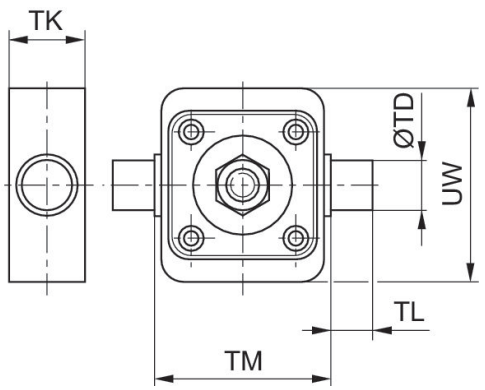

Trunnion mounting MT4, Series CM1

1827003994

Piston Ø	Part No.	TD e9	TK max.	TL h14	TM h14	UW
32	1827003991	12	22	12	50	64
40	1827003992	16	27	16	63	72
50	1827003993	16	27	16	75	90
63	1827003994	20	35	20	90	102
80	1827003995	20	35	20	110	125
100	1827003996	25	46	25	132	147
125	1827003997	25	46	25	160	178