Datasheet

Plate flange

BRD6-I



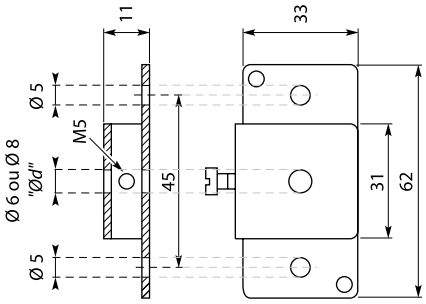

Part Number :	BRD6-I
Product description :	Plate Flange for Use with Temperature Sensor Ø6mm
Product detail :	Stainless steel flat flange for Ø6mm temperature sensor mounting dimensions 62mmx33mmx11mm

SPECIFICATIONS

Attribute	Value
Accessory type :	Plate flange
For use with :	Temperature probe 6mm
Probe diameter :	6mm

Bayonet *adaptors*



Part number	Ø (mm)	Threading
EBD10-M8X100	10	M8 x 100
EBD10-M10X100	10	M10 x 100
EBD10-M10X150	10	M10 x 150
EBD10-M12X100	10	M12 x 100
EBD10-M12X175	10	M12 x 175
EBD10-M14X150	10	M14 x 150
EBD10-M14X200	10	M14 x 200
EBD10-1/8GC	10	1/8" GC
EBD10-1/4GC	10	1/8" GC

Part number	Ø (mm)	Threading
EBD12-M10X150	12	M10 x 150
EBD12-M12X175	12	M12 x 175
EBD12-1/4GC	12	1/4" GC
EBD12-3/8GC	12	3/8"GC
EBD12-M10X100	12	M10 x 100
EBD12-M12X100	12	M12 x 100
EBD12-M14X150	12	M14x150
EBD14-M14x150	14	M14x150
EBD15-M12x100	15	M12x100
EBD15-1/4GC	15	1/4" GC
EBD16-1/4GC	16	1/4" GC

Mounting bracket *cast steel*



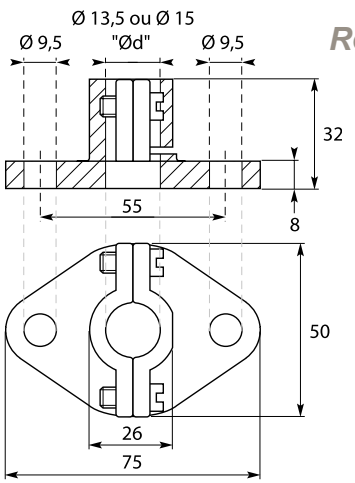

Ref. BRD ["Ød"]

Ø 13,5 mm	13,5
Ø 15 mm	15

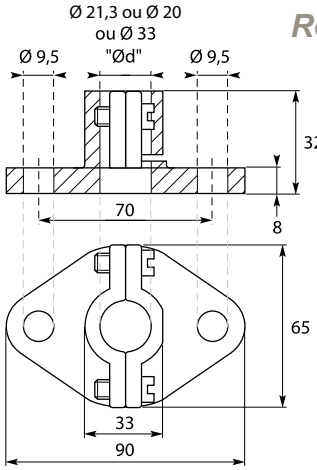

Ref. BRD [ ]

Ø 20 mm	20
Ø 21,3 mm	21,3
Ø 33 mm	33

Mounting bracket *aluminium*



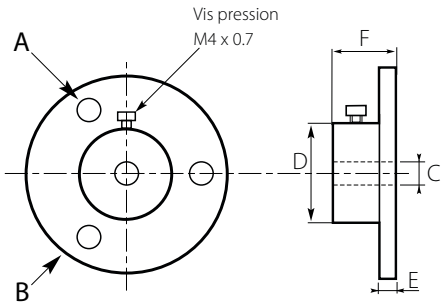

Ø to suit

Ref. BRD [ ] -A

6
8

Ref.	A	B	C	D	E	F
BRD8-A	7	75	8.1	25	3	25
BRD6-A	4.6	50	6.1	20	5.2	15.5

Mounting bracket *stainless steel*



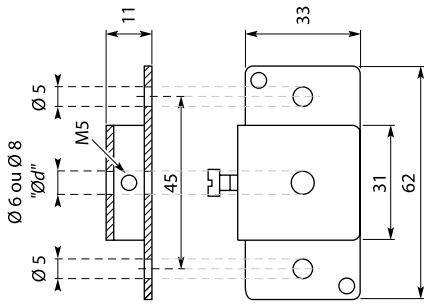

"Ød"

Ref. BRD [ ] -I

Ø 6 mm	Ø6
Ø 8 mm	Ø8