LED/Buzzer 420 / Accessories

Tube adapter RM BK



Part No.: 975.420.01

MECHANICAL DATA	
Height	67 mm
Diameter	89 mm
Materials	PC/ABS
Housing colour	Black
Protection category	IP65
Weight with packaging	75 g
Product weight	75 g

APPROVAL DATA	
WEEE	No
Conforms with RED directive	No
Conforms with ATEX-directive	No
Conforms with CCC	No
Conforms with UL	No
Conforms with FCC	No
Conforms with IC	No
EAC certificate available	No
Conforms with AS-I	No
ICAO Certification	No
Conforms with DNV	No
Conforms with RoHS CN	No

! For additional installation and mounting information, refer to the appropriate user guide at www.werma.com. This printed copy is for information only and is subject to alteration.

LED/Buzzer 420 / Accessories

Tube adapter RM BK

DRAWING

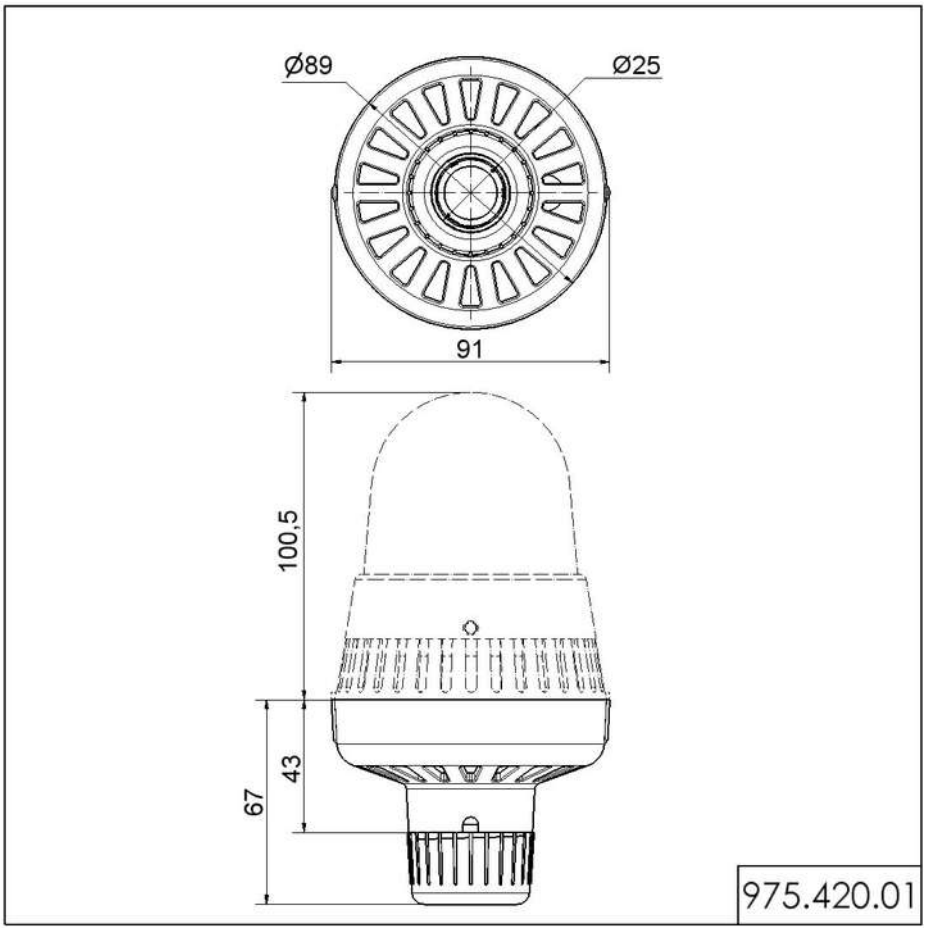

! For additional installation and mounting information, refer to the appropriate user guide at www.werma.com. This printed copy is for information only and is subject to alteration.