E37350

Screw-in adapter for process sensors

ROTATABLE DOUBLE NIPPLE

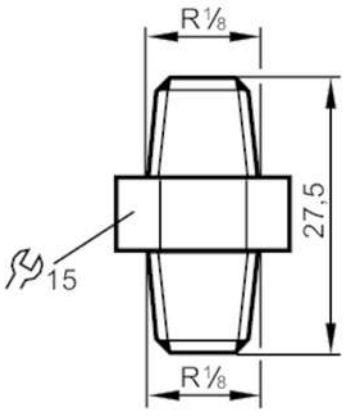

Application		
Installation		rotatable
Pressure rating	[bar]	16
Tests / approvals		
Pressure Equipment Directive		A possible classification to PED depends on the application and has to be carried out by the user / operator.
Pressure Equipment Directive EAC		The adapter is intended for use in devices, machines and installations that do not fall under the categories of the technical rule TR CU 032/2013.
Safety instructions		The compatibility between medium and product material has to be checked in all applications.
Mechanical data		
Weight	[g]	20.3
Type of mounting		rotatable
Materials		brass nickel-plated
Sensor connection		R 1/8
Process connection		threaded connection R 1/8
Remarks		
Pack quantity		1 pcs.