# Measurement- Univ. current/voltage converter with ModBus RTU/RS485

Status: Available Data sheet created: 01.07.2025

**Item Number:** 2800110 - **Serie:** SensAct - **EAN:** 9008662014145



- universal current / voltage converter
- universal converter input
- Analog and RS485 Modbus RTU interface
- RMS, AC and DC measurement
- Min / Max and average measurement
- Frequency and crest factor measurement
- Temperature and resistance measurement (PT100 or NTC)
- further harmonic analysis up to 63rd, THD, I/V peak and device temperature.

## Description

Precise and reliable reading of mechanical, electrical and electronic measured values with analogue and digital evaluation options.

## General information

| | |
|---|---|
| **Short description** | Univers. Current/voltage converter with ModBus RTU/RS485, ADV |
| **Item Number** | 2800110 |
| **EAN** | 9008662014145 |
| **Main category** | Measurement Technology |
| **Series** | SensAct |
| **Type** | S1XMmHM |
| **Design** | Installation design |
| **Supply** | 10-30V DC |

## Ambient conditions and general specifications

| | |
|---|---|
| **Pollution degree** | 2, pollution level can be increased by installation in suitable enclosures (according to IEC 60664-1) |

## Logistics

| | |
|---|---|
| **Minimum Quantity** | 1 |
| **Tariff Number** | 85437090 |
| **EAN** | 9008662014145 |
| **Country of Origin** | IT |
| **Product Weight (g)** | 79.8 |

## Available declarations / conformities

| | |
|---|---|
| **CE** | ✓ |
| **REACH** | Open document |
| **WEEE** | Open document |
| **TSCA** | Open document |
| **RoHs** | Open document |
| **CMRT** | Open document |

## Further documents

| | |
|---|---|
| **MODBUS Register S1XMmxx** | Download document |

## Software

| | |
|---|---|
| **SensAct-Software** | Download software |

## CAD Files

| | |
|---|---|
| **STEP_S1XM_en.stp** | Download file |

## Media & drawings



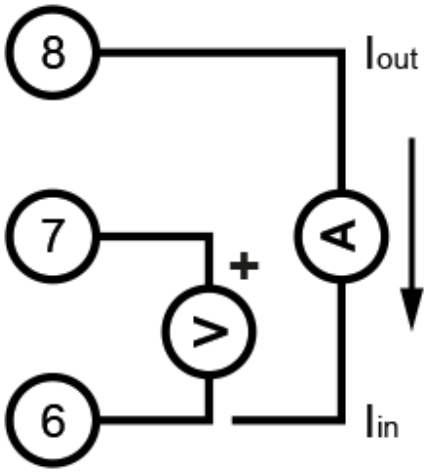


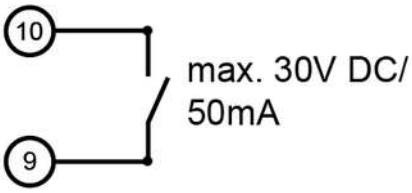


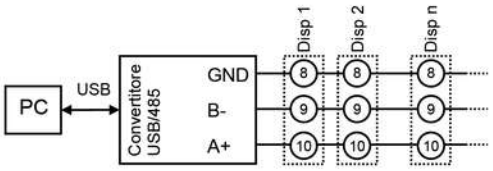


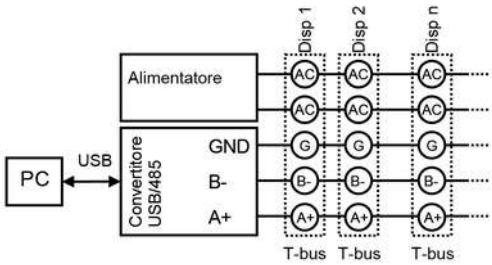


**Tele Haase Steuergeräte Ges.m.b.H**
Vorarlberger Allee 38
1230 Vienna
Austria

CALL US +43 / 1 / 614 74 - 0
ONLINE SUPPORT support@tele-haase.at

Changes and errors excepted