Product datasheet

Specifications



Photoelectric sensors XU, XUK, reflex, Sn 7 m, 12...24 VDC, cable 2 m

XUK1ANANL2

Main

Range of product	Telemecanique Photoelectric sensors XU
Series name	General purpose single mode
Electronic sensor type	Photo-electric sensor
Sensor name	XUK
Sensor design	Compact 50 x 50
Detection system	Reflex
Material	Plastic
Type of output signal	Discrete
Supply circuit type	DC
Wiring technique	3-wire
Discrete output type	NPN
Discrete output function	1 NO
Electrical connection	Cable
Cable length	2 m
Product specific application	-
Emission	Infrared reflex
[Sn] nominal sensing distance	7 m reflex need reflector XUZC50

Complementary

Enclosure material	PBT
Lens material	PMMA
Maximum sensing distance	10 m reflex
Output type	Solid state
Wire insulation material	PVC
Status LED	1 LED (yellow) for output state
[Us] rated supply voltage	12...24 V DC
Switching capacity in mA	<= 100 mA (overload and short-circuit protection)
Switching frequency	<= 250 Hz
Maximum voltage drop	<1.5 V (closed state)

Disclaimer: This documentation is not intended as a substitute for and is not to be used for determining suitability or reliability of these products for specific user applications

Current consumption	<= 35 mA no-load
Maximum delay first up	15 ms
Maximum delay response	2 ms
Maximum delay recovery	2 ms
Setting-up	Without sensitivity adjustment
Depth	50 mm
Height	50 mm
Width	18 mm
Net weight	0.07 kg

Environment

Product certifications	CE CSA UL
Ambient air temperature for operation	-25…55 °C
Ambient air temperature for storage	-40…70 °C
Vibration resistance	7 gn, amplitude = +/- 1.5 mm (f = 10…55 Hz) conforming to IEC 60068-2-6
Shock resistance	30 gn (duration = 11 ms) conforming to IEC 60068-2-27
IP degree of protection	IP65 double insulation conforming to IEC 60529

Packing Units

Unit Type of Package 1	PCE
Number of Units in Package 1	1
Package 1 Weight	161.0 g
Package 1 Height	4.5 cm
Package 1 width	9.2 cm
Package 1 Length	13.3 cm
Unit Type of Package 2	S02
Number of Units in Package 2	22
Package 2 Weight	4.028 kg
Package 2 Height	15 cm
Package 2 width	30 cm
Package 2 Length	40 cm

Offer Sustainability

Sustainable offer status	Green Premium product
REACh Regulation	REACh Declaration
EU RoHS Directive	Pro-active compliance (Product out of EU RoHS legal scope) EU RoHS Declaration
Mercury free	Yes
RoHS exemption information	Yes
Environmental Disclosure	Product Environmental Profile
Circularity Profile	End of Life Information

Contractual warranty

Warranty	18 months

Product datasheet XUK1ANANL2

Dimensions Drawings

Dimensions

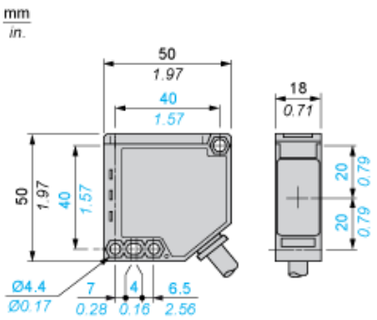

Wiring Schemes

NPN Outputs

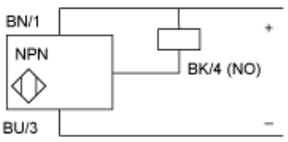

BN : Brown
BU : Blue
BK : Black

Detection Curves

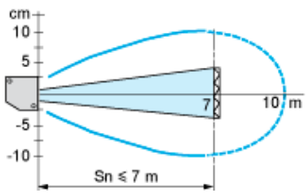

With reflector XUZC50