PNP Series
Sealed Pushbutton Switches



Specifications

Function	SPST, SPDT Double Break (Form Z) Momentary
Contact Arrangement	N.O. and N.C.
Mounting Type	Threaded front mount

Mechanical Characteristics

Operating Life	1,000,000 cycles
Total Travel	2 mm max.
Operating Point	0.9 ± 0.25 mm
Over Travel	0.25 mm min.
Operating Force	3N ± 1.5N 8N ± 1.5N
Vibration	10-500 Hz 10g Max.
Shock	50g 11ms sawtooth wave

Electrical Characteristics

Contact Rating	Option "Q" Silver 5A/32 VDC resistive (25,000 cycles) 3A/32 VDC resistive (25,000 cycles) Option "G" Gold over Silver 10mA/5 VDC resistive (1,000,000 cycles)
Dielectric Strength	1,000 V AC for 1 min.
Insulation Resistance	1 G Ω @ 500 V DC
Initial Contact Resistance	50 mΩ max (without wire leads)
Bounce Time	< 5 ms
Operating Temperature	-40°C to 85°C
ESD Protection	15 KV min.
Sealing	IP68

Description

The PNP series sealed pushbutton switch is engineered to meet the needs of applications for harsh environments – such as industrial, off-road, heavy equipment and lift products – where the switches are used repeatedly and are exposed to dust, water or other typically damaging elements. PNP switches are IP68 sealed and RoHS compliant, feature a long lifecycle (1,000,000 uses) and are available in a variety of housing styles with up to a 5A resistive load.

Features & Benefits

- Snap-Action provides positive tactile feedback
- IP68 sealed to endure harsh environments
- 1,000,000 life cycle
- Up to 5A resistive load
- Multiple housing styles
- Various termination types and wirelead options are also available
- RoHS compliant

Applications

- Control Grips
- Off-Road Panels
- Heavy Equipment
- Industrial Instruments
- Lifts
- Conveyor Controls

Materials

Housing	PBT/PC
Base	PBT
Cap	
Actuator	
Internal Seal	Silicone rubber
Terminals	Copper with silver nickel inlay, silver plating
Movable Contact	Copper alloy, gold over silver plating
Terminal Seal	Epoxy

Notes:
Specifications and materials listed above are for switches with standard options. For information on specific and custom switches, please contact Customer Service.

© 2024 Littelfuse, Inc.
Specifications are subject to change without notice.
Revised: CM.10/22/24

PNP Series
Sealed Pushbutton Switches

Ordering Number

To order, simply select desired option from each category and place in the appropriate box.

PNP - x - x - x - x - 2 - x - x - x - E

Designation
PNP: PNP Series

Operating Force
3: 3 Newtons
8: 8 Newtons

Actuator Style
S: Standard
E: Extended (D housing style only)
N: None

Actuator Color[1]
0: No Cap
1: White
2: Black (STD)
3: Red
4: Orange
5: Yellow
6: Green
7: Blue
9: Gray

Housing Style
T: Standard threaded mount
D: Dome bezel

Housing Color
2: Black (STD)

Circuit
C: SPDT - Double Break
W: SPST NC - Double Break
Y: SPST NO - Double Break

Termination
02: PC Pin (G Contact Material)
03: Solder lug (STD)
W2: 2 x 12" 22 AWG UL1569 wire (overmolded)
W3: 3 x 12" 22 AWG UL1569 wire (overmolded)
W4: 4 x 12" 22 AWG UL1569 wire (overmolded)

Contact Material
Q: Silver (STD)
G: Gold over silver

Terminal Seal
E: Epoxy. All models are epoxy sealed

Notes:
1. Please contact Customer Service for additional colors.

Standard View

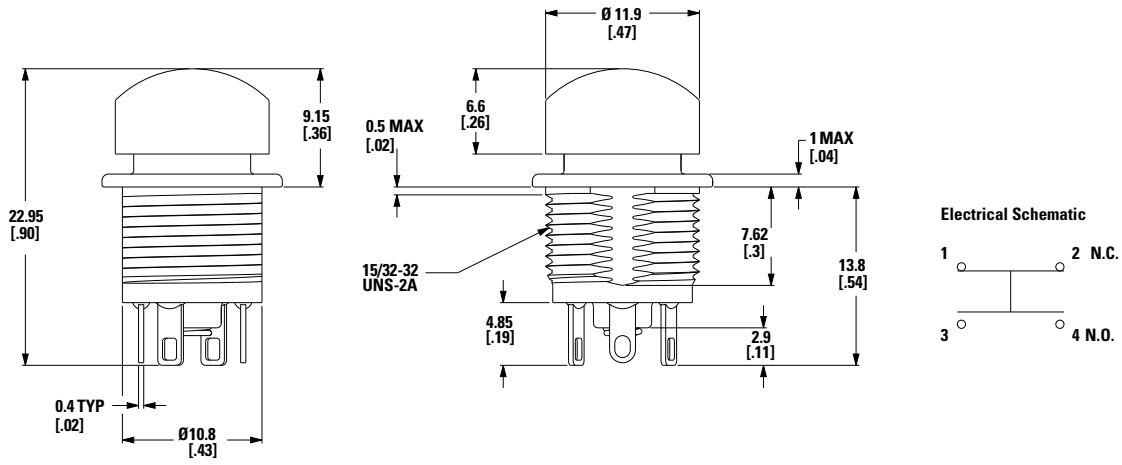

Operating Force

Option Code	Operating Force
3	3 N
8	8 N

© 2024 Littelfuse, Inc.
Specifications are subject to change without notice.
Revised: CM.10/22/24

PNP Series
Sealed Pushbutton Switches

Actuator Style

S Standard **E Extended (D Housing Style Only)** **N No Cap**

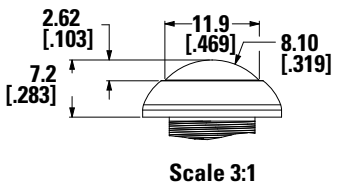

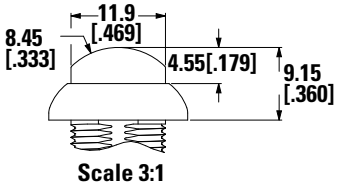

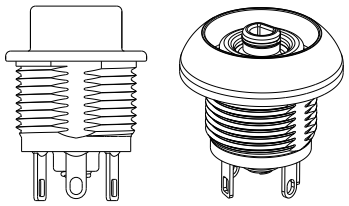

Actuator Color

Option Code	Actuator Color
0	No Color
1	White
2	Black
3	Red
4	Orange
5	Yellow
6	Green
7	Blue
9	Gray

Note: Cap may be ordered separately

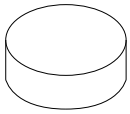

Part Number	Color
285E01000	White
285E02000	Black
285E03000	Red
285E04000	Orange
285E05000	Yellow
285E06000	Green
285E07000	Blue
285E09000	Gray

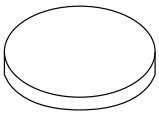

Part Number	Color
824D01000	White
824D02000	Black
824D03000	Red
824D04000	Orange
824D05000	Yellow
824D06000	Green
824D07000	Blue
824D09000	Gray

Housing Style

T Standard Threaded Mount

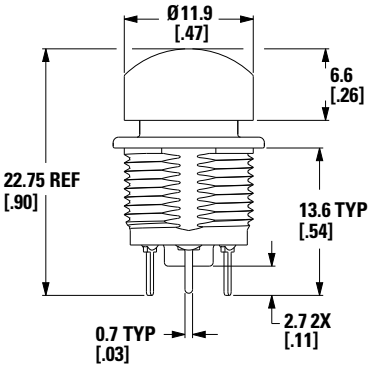

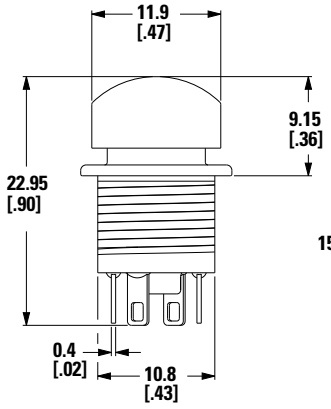

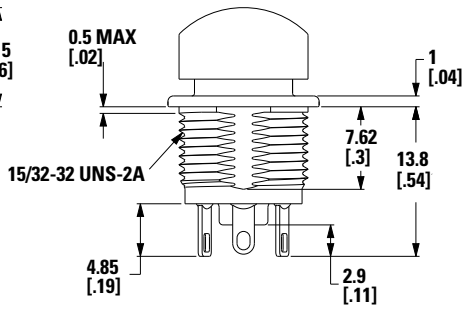

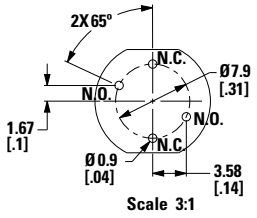

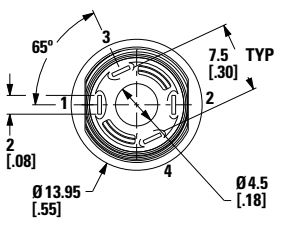

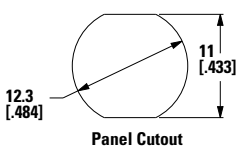

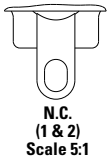

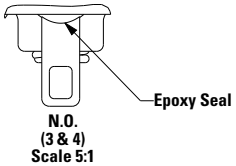

© 2024 Littelfuse, Inc.
Specifications are subject to change without notice.
Revised: CM.10/22/24

PNP Series
Sealed Pushbutton Switches

D Dome Bezel

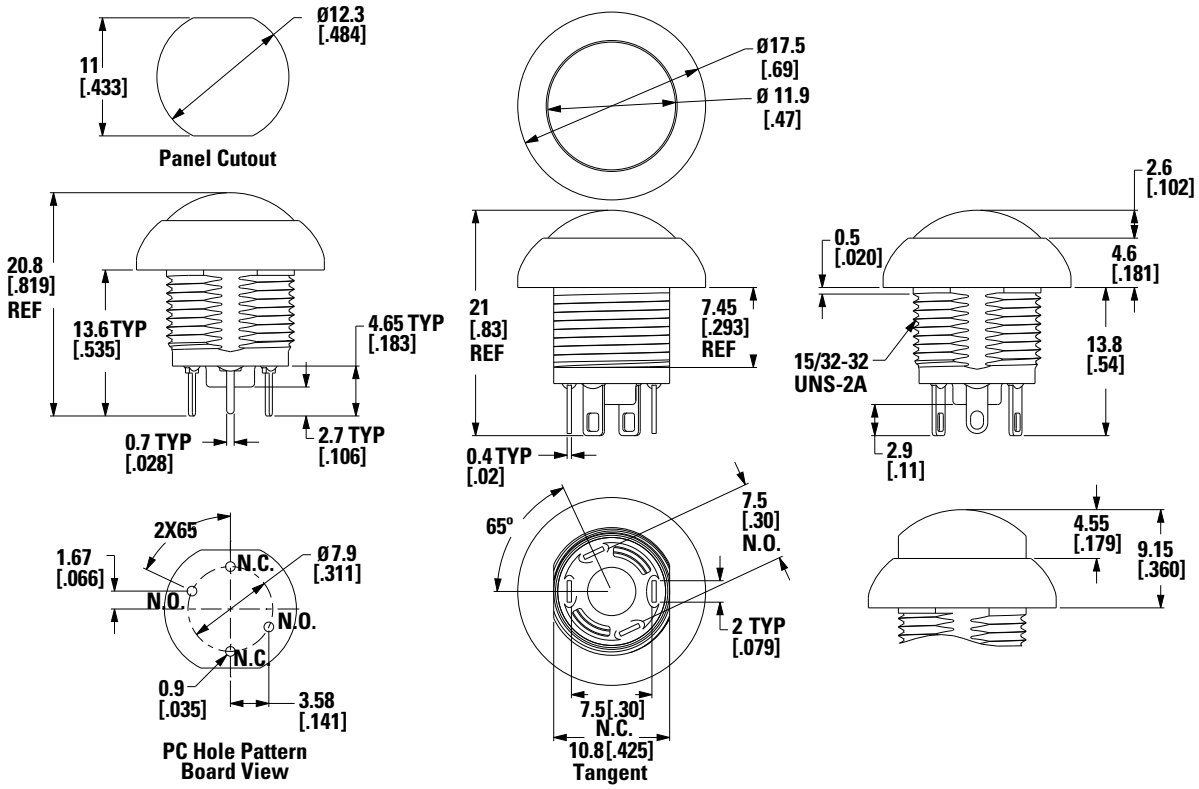

Housing Color

Option Code	Color
2	Black (STD)

Circuit

W SPST NC - Double Break

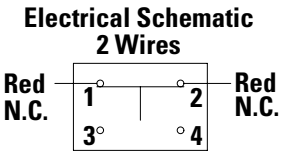

Y SPST NO - Double Break

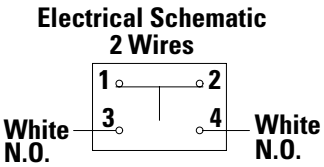

C SPDT - Double Break

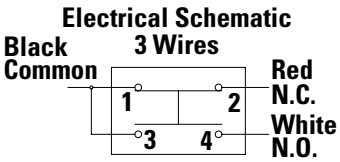

C SPDT - Double Break

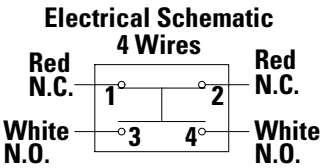

© 2024 Littelfuse, Inc.
Specifications are subject to change without notice.
Revised: CM.10/22/24

PNP Series
Sealed Pushbutton Switches

Termination

02 PC Pin

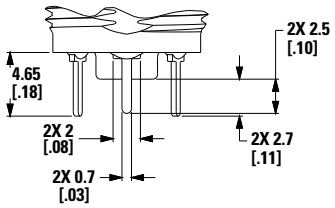

03 Solder Lug (STD)

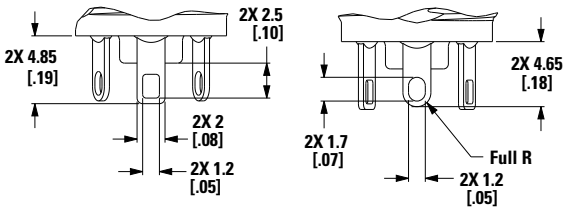

W2 2x 12″ 22 AWG UL1569 Wire (Overmolded)

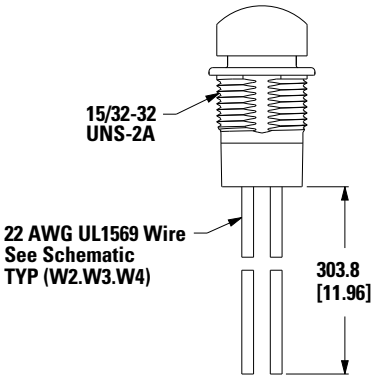

W3 3x 12″ 22 AWG UL1569 Wire (Overmolded)

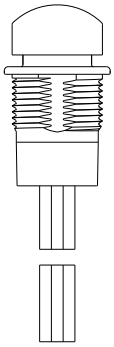

W4 3x 12″ 22 AWG UL1569 Wire (Overmolded)

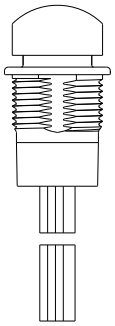

Contact Material

Option Code	Contact Material
Q	Silver (STD)
G	Gold over silver

Terminal Seal

E Epoxy

All models are epoxy sealed

Hardware

Hex Nut 707100201 Nickel-Plated

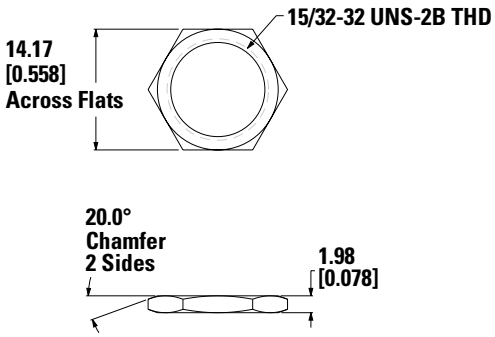

Lockwasher 700302202

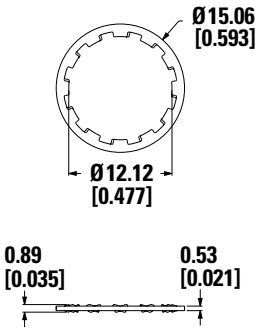

Panel Sasket 851D02000

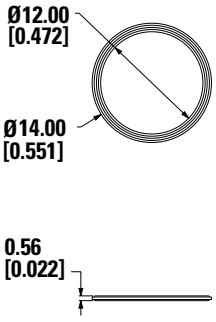

Disclaimer Notice - Information furnished is believed to be accurate and reliable. However, users should independently evaluate the suitability of and test each product selected for their own applications. Littelfuse products are not designed for, and may not be used in, all applications. Read complete Disclaimer Notice at http://www.littelfuse.com/disclaimer-electronics.

© 2024 Littelfuse, Inc.
Specifications are subject to change without notice.
Revised: CM.10/22/24