**Part Number:** **BU-36-***
**Description:** **Insulator for BU-34 Clips**

4806

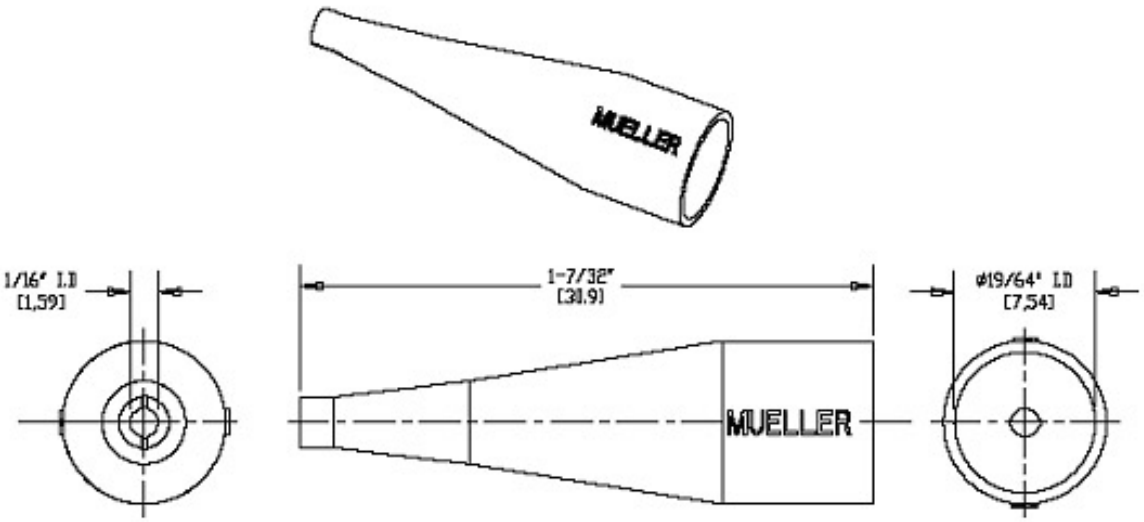


- Used to prevent clips from shorting against each other or other objects
- Use with BU-34, BU-34C series clips
- Order as BU-36-*, where "*" is the number of the color shown below:
  0=black, 2=red, 4=yellow, 5=green, 6=blue, 9=white
- Material: High quality, durable PVC
- Packaged in Bulk
- RoHS Compliant

*Mueller Electric Company*
*1625 E. 31st Street*
*Cleveland, Ohio 44114*

*ISO 9001:2000*
*Over 95 Years Of Innovation*
*www.muellerelectric.com*

*TEL. 800-955-2629*
*TEL. 216-771-5225*
*FAX. 216-771-3068*