E40179

Mounting adapter for flow sensors

ADAPTER G1-R1/2/V4A

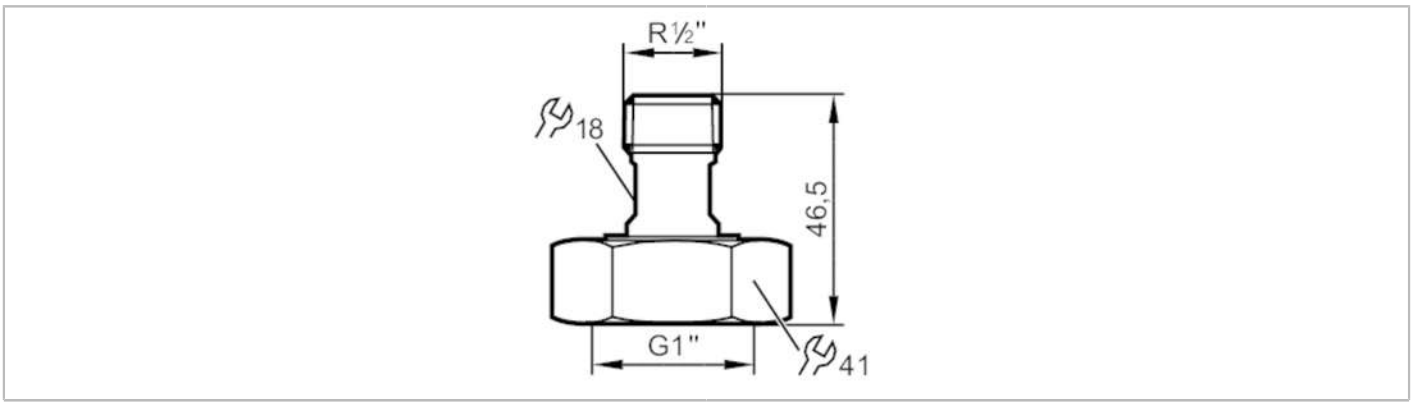

Reg31

Application		
Design		for flow sensors Typ SM8, SU8
Tests / approvals		
Pressure Equipment Directive		A possible classification to PED depends on the application and has to be carried out by the user / operator.
Pressure Equipment Directive EAC		The adapter is intended for use in devices, machines and installations that do not fall under the categories of the technical rule TR CU 032/2013.
Safety instructions		The compatibility between medium and product material has to be checked in all applications.
Mechanical data		
Weight	[g]	342.5
Materials		Adapter: stainless steel (1.4404 / 316L); Gasket: Centellen 23,5 x 30 x 3 mm
Sensor connection		G 1
Process connection		threaded connection R 1/2
Accessories		
Items supplied		O-rings: 2
Remarks		
Pack quantity		2 pcs.