Brand of NTN corporation

Technical data

24128EAW33

Spherical roller bearings



Spherical roller bearing, pressed steel cage, groove and lubrication holes on outer ring

ULTAGE

VISUAL (S)

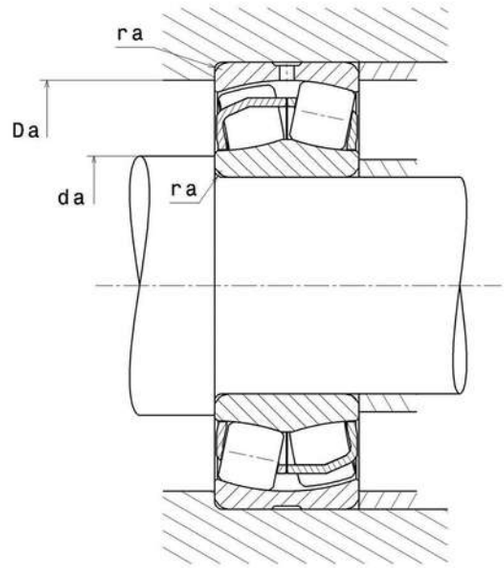

24128EAW33
Spherical roller bearings

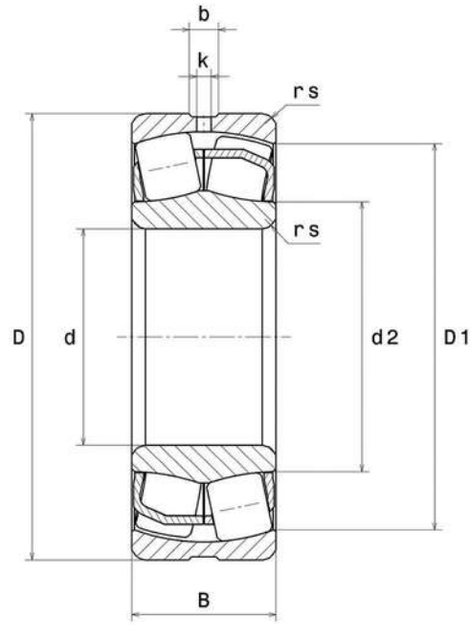

PRODUCT DEFINITION

Brand	SNR
d - Internal diameter	140 mm
D - External diameter	225 mm
B - Bearing/Inner ring width	85 mm
d2 - External diameter inner ring	156,2 mm
D1 - Inner diameter outer ring	197,6 mm
rs - Min fillet radius	2,1 mm
Number of lubrication holes	3 ou 4
b - Groove width	10 mm
k - Hole diameter	4,5 mm
Radial clearance class	CN
Mass	12,77 kg

PRODUCT PERFORMANCE

24128EAW33
Spherical roller bearings

PRODUCT PERFORMANCE	
C - Dynamic load	951000000 mN
C0 - Static load	1280000000 mN
Cu - Fatigue limit load	130000000 mN
e - Coefficient	0.34
Y0 - Static axial load coefficient	1.93
Y1 - Lower axial load coefficient	1.98
Y2 - Upper axial load coefficient	2.94
N ref - Reference thermal speed	9600 °/s
N lim - Mechanical Limit Speed	13800 °/s
Tmin - Min operating temperature	233,15 °K
Tmax - Max operating temperature	473,15 °K

BEARING FREQUENCIES	
BPFO - Over rolling frequency on outer ring (60 rpm)	9.635 Hz
BPFI - Over rolling frequency on inner (60 rpm)	12.365 Hz
BSF - Over rolling frequency on rolling element (60 rpm)	7.737 Hz
BRF - Rotational frequency – rolling element (60 rpm)	3.869 Hz
FTF - Rotational frequency - cage (60 rpm)	0.438 Hz

ABUTMENT	
da max - Max shoulder diameter IR	0 mm
da min - Min shoulder diameter IR	152 mm
Da max - Max shoulder diameter OR	213 mm
ra max - Max shaft & housing fillet radius	2 mm

INDUSTRY CALCUL FACTORS

Equivalent dynamic radial load

$P = X.Fr + Y.Fa$

Fa / Fr ≤ e		Fa / Fr > e	
X	Y	X	Y
1	Y1	0.67	Y2

Equivalent static radial load

$Po = Xo.Fr + Yo.Fa$

X_0	Y_0
1	Y0

The values for e, Y1, Y2 and Y0 are shown in the above table .