Standard oil-mist lubricator, Series AS5-LBS

2024-03-20

R412009232

Series AS5

The AVENTICS Series AS5 is a modular, versatile maintenance unit for universal application. This Series offers compact dimensions, is highly efficient, lightweight and easy-to-use. The AVENTICS Series AS guarantees reliability, safety, and efficiency with a simplified assembly and maintenance efforts.



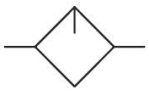

Technical data

Industry	Industrial
Parts	Lubricator
Reservoir	reservoir, PA, with PA protective guard
Lubricator version	with level indicator
Compressed air connection	G 1
Nominal flow Qn	15800 l/min
Mounting orientation	vertical
Min. working pressure	0.5 bar
Max. working pressure	16 bar
Min. ambient temperature	-10 °C
Max. ambient temperature	50 °C
Medium	Compressed air Neutral gases
Type of filling	Semi-automatic oil filling during operation Manual oil filling
Lubricator reservoir volume	181 cm³
Protective guard	with protective guard
Oil dosing at 1000 l/min	1-2 drops
Function	Oil-mist lubricator
Function	Can be assembled into blocks

Weight	0.77 kg

Material

Housing material	Polyamide
Material front plate	Acrylonitrile butadiene styrene
Seal material	Acrylonitrile butadiene rubber
Material threaded bushing	Die cast zinc
Material reservoir	Polycarbonate
Material protective guard	Polyamide
Part No.	R412009232

Technical information

The pressure dew point must be at least 15 °C less than ambient and medium temperature and may not exceed 3 °C.

Electrical level detection only with ST6 sensor with reed contact, sensor holder included in the scope of the delivery.

Sensor not included in scope of delivery, sensor installation prepared.

The entire preset drip quantity enters the pressure system.

Manual oil filling possible during operation at a maximum operating pressure of 10 bar.

Note: Polycarbonate reservoirs are susceptible to solvents, supplementary information can be found at "Customer information".

Nominal flow Qn with secondary pressure p2 = 6 bar at Δp = 1 bar

A change in the flow direction (from air supply on the left to air supply on the right) occurs by rotating installation by 180° about the vertical axis. Please see the operating instructions for further details.

Standard oil-mist lubricator, Series AS5-LBS

2024-03-20

R412009232

Dimensions

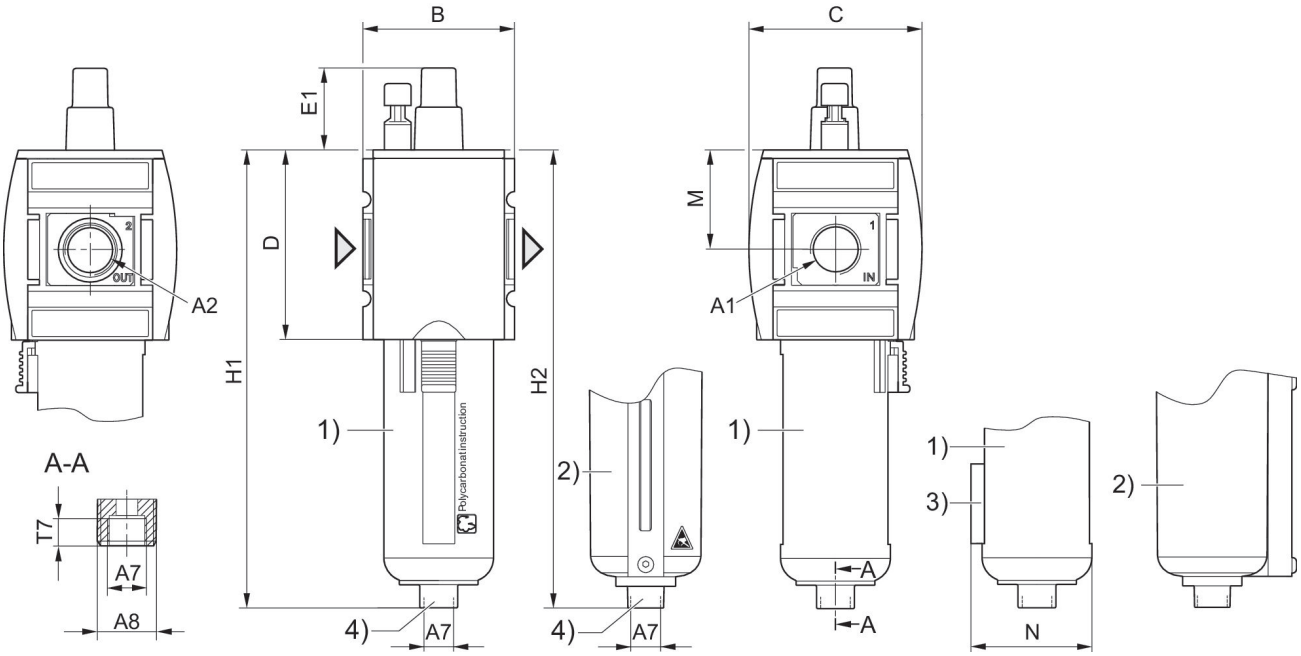

A1 = input A2 = output
1) Plastic reservoir and protective guard with window
2) Metal reservoir with inspection glass
3) Holder for sensor
4) Port for semi-automatic oil filling

Dimensions in mm

Part No. G 3/4	A1	A2	A7	A8	B	C	D	E1	H1
R412009225	G 3/4	G 3/4	G 1/8	G 1/4	85	103	109	30.5	239
R412009226	G 3/4	G 3/4	G 1/8	G 1/4	85	103	109	30.5	239
R412009229	G 3/4	G 3/4	G 1/8	G 1/4	85	103	109	30.5	239
R412009231	G 1	G 1	G 1/8	G 1/4	85	103	109	30.5	239
R412009232	G 1	G 1	G 1/8	G 1/4	85	103	109	30.5	239
R412009235	G 1	G 1	G 1/8	G 1/4	85	103	109	30.5	239

Part No. G 3/4	H2	M	T7
R412009225	243	58	8.5
R412009226	243	58	8.5
R412009229	243	58	8.5
R412009231	243	58	8.5
R412009232	243	58	8.5
R412009235	243	58	8.5

Flow rate characteristic, p2 = 0,05 - 7 bar

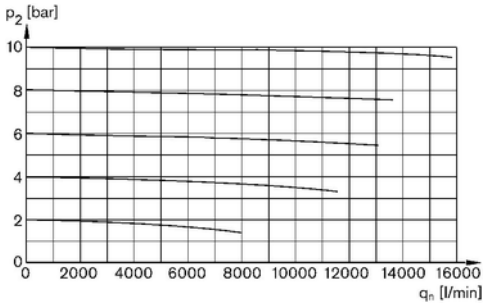

p2 = secondary pressure qn = nominal flow

Lubricator activation margin

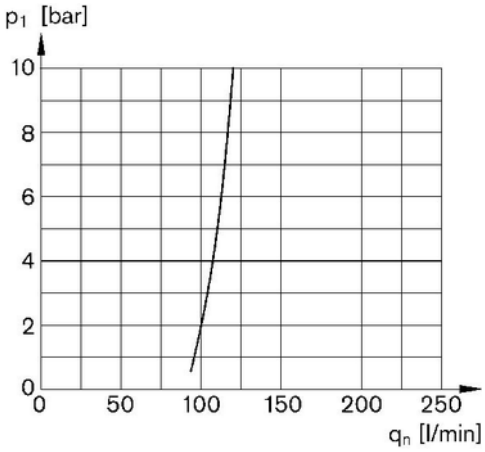

p1 = working pressure qn = nominal flow

Accessories overview

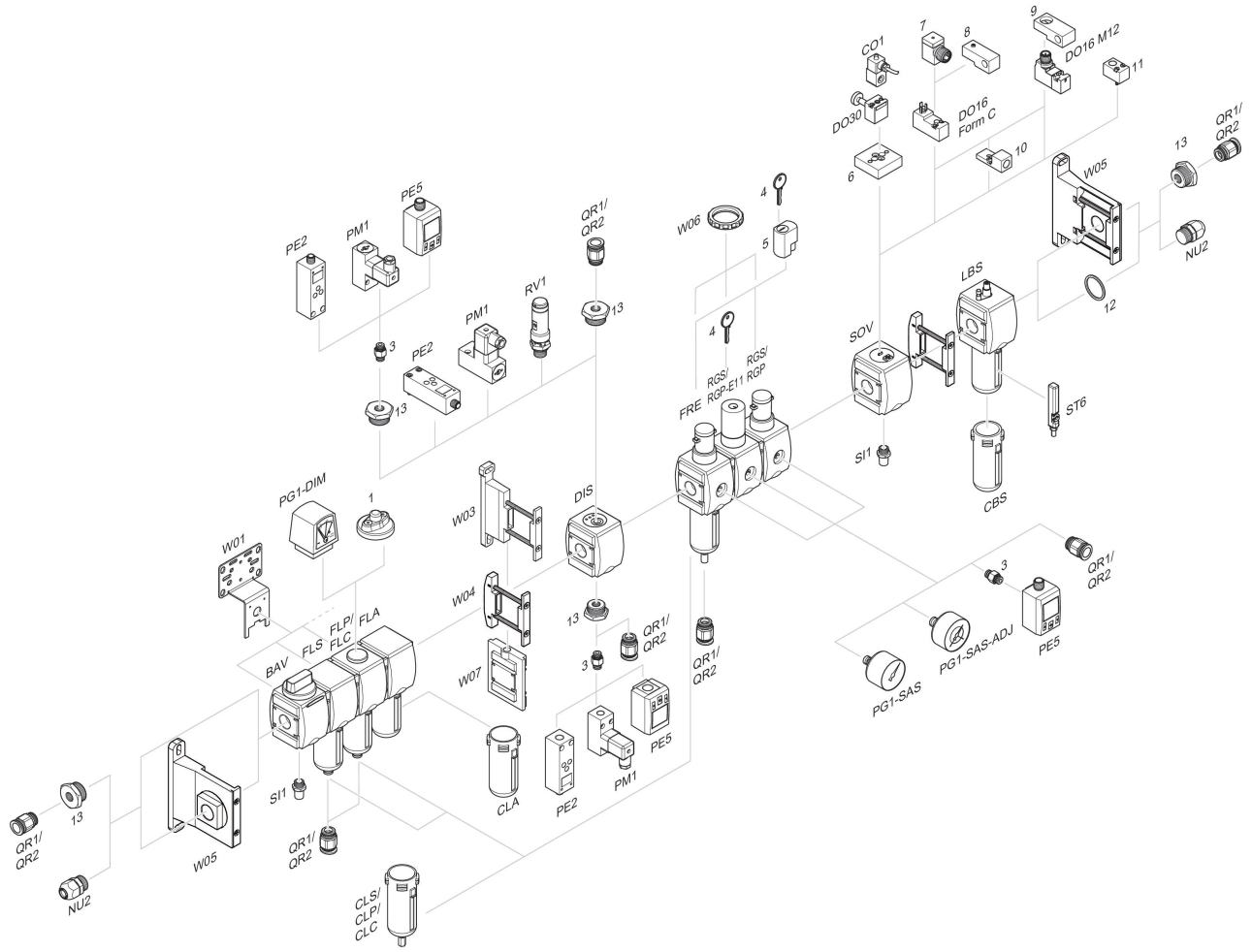

1 = contamination display 3 = Double nipple 4 = Key for E11 locking 5 = mortise lock 6 = Transition plate DO30 7 = Adapter, Series CON-VP 8 = Mounting aid DO16, form C 9 = Mounting aid DO16, M12 10 = Adapter for external pilot air 11 = Adapter pneumatic operation 12 = Sealing ring 13 = Reducing nipple