IP series

Latching action pushbutton switches for harsh environments

Distinctive features and specifications



- **Latching action**
  Actuator remains in the low position when "ON".
- **Illuminated and non-illuminated**
- **Compact**
  Behind-panel depth less than 20 mm (.787)

New!

- **Flat round actuator for optional marking**
- **Sealed to IP 67**

B

ENVIRONMENTAL SPECIFICATIONS

- Degree of protection : IP 67 - See details page B36.
- Shock resistance : 100 g according to IEC 512-4, test 6c
- Vibration resistance : 10-500Hz - 10 g according to IEC 512-4, test 6d
- Salt spray : IEC 512-6, test 11f
- Robustness (non-illuminated sw.) : IK06 according to EN 50102 (1 joule)
- Operating temperature : -40°C to +85°C

ELECTRICAL AND GENERAL SPECIFICATIONS

- Max. current/voltage rating with resistive load :
  100mA 24VDC - life expectancy 200 000 cycles
  2A 125VAC - life expectancy 10 000 cycles (tested according to UL 1054)
- Initial contact resistance : 100 mΩ max.
- Insulation resistance : 1 GΩ min. at 500VDC
- Dielectric strength : 1.500 VAC rms between terminals
  1.000 VAC rms between terminals and frame
- Panel thickness : 1,5 mm (.059) min. - 5,5 mm (.217) max.
- Total travel : 2,5 mm (.098)
- Operating force : 5,5 N +/- 1N
- Contact bounce : 10 ms
- Torque : 1,5 Nm applied to nut
- Soldering : 320°C max. for 3 seconds

LED COMPONENT SPECIFICATIONS			
LED colour	Forward current	Forward Voltage	Max. lumin. intensity
Super red (L0S)	20mA	2V	180 mcd
Yellow (L0Y)	20mA	2V	280 mcd
Green (L0G)	10mA	2V	28 mcd
Blue (L0B)	10mA	3,5V	22 mcd

A resistor must be series-connected by the user.

$$\text{Resistor value} = \frac{\text{supply voltage - LED forward voltage}}{\text{LED forward current}}$$

MATERIALS

- Case : PA-6T, UL 94-V0
- Plunger : polyamide 6/6
- Bushing/bezel : zinc die-cast (zamak), black painted
- Contacts : silver, gold plated
- Multi-wire lead AWG20, section 0,6 mm^2, UL approved
- LED wire : AWG26
- Lens : polycarbonate
- Terminal seal : epoxy

IP series

Latching action pushbutton switches for harsh environments

Overview

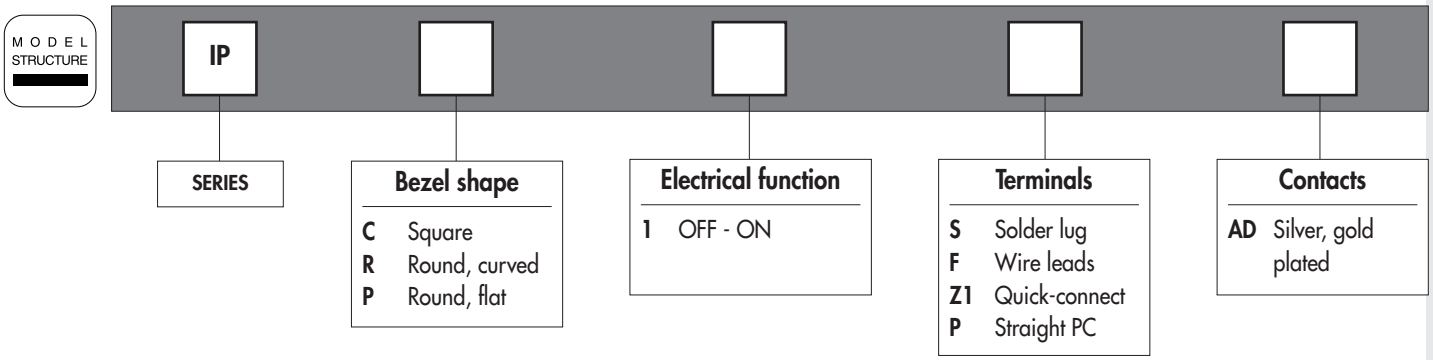

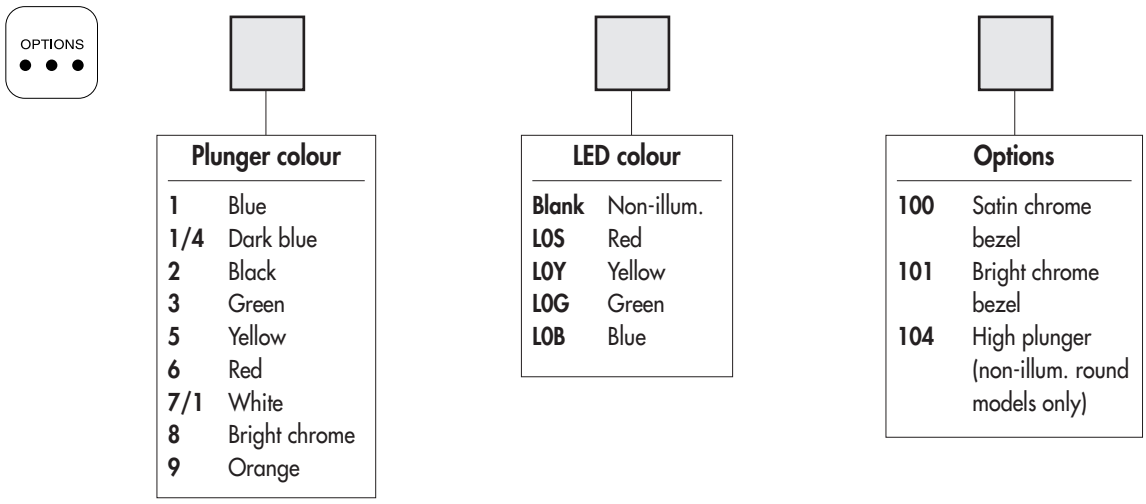

B

ABOUT THIS SERIES
On the following pages, you will find successively :
model structure of switches and options in the same order as in above chart

Dimensions : first dimensions are in mm while inches are shown as bracketted numbers.

NOTICE : please note that not all combinations of above numbers are available.
Refer to the following pages for further information.

A sealing boot is available to protect the switches against frost and sand (P/N U5125).
It is presented at the end of the IP series and in section H.

Mounting accessories : Standard hardware supplied : 1 hex nut 14 mm (.551) across flats and 1 O-Ring.

Packaging unit : 25 pieces

IP series

Latching action pushbutton switches for harsh environments

Square or round - illuminated

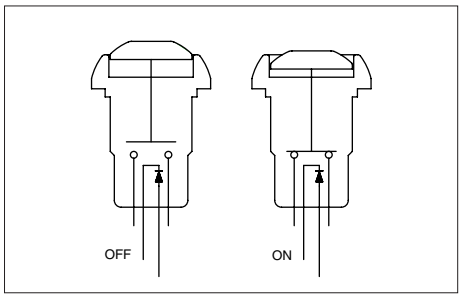

- Four LED colours
- Tin plated LED terminals

Straight **P**

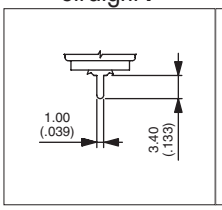

Quick-connect **Z1**

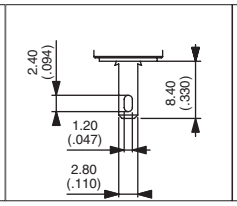

Solder lug **S**

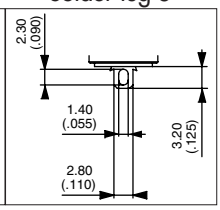

MODEL STRUCTURE

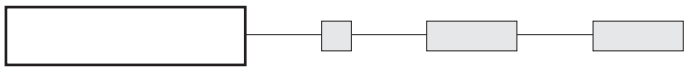

B

Square models



Solder lug terminals
IPC1SAD OFF - ON

Wire lead terminals
IPC1FAD OFF - ON

Flat

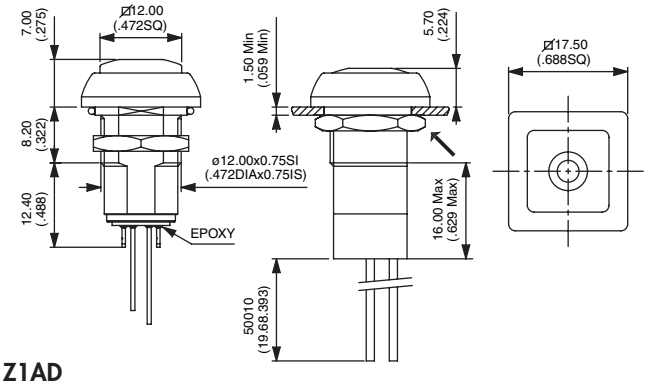

Also available with straight PC : **IPC1PAD** or quick-connect terminals : **IPC1Z1AD**

Round models



Solder lug terminals
IPR1SAD OFF - ON

Wire lead terminals
IPR1FAD OFF - ON

Flat

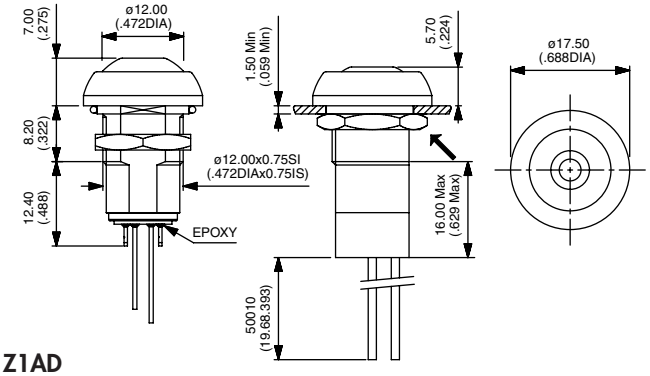

Also available with straight PC : **IPR1PAD** or quick-connect terminals : **IPR1Z1AD**

PLUNGER COLOUR

Wire colours : black : contact, red : LED anode(+), blue : LED cathode(-)



1 : blue - **1/4** : dark blue - **2** : black - **3** : green - **5** : yellow - **6** : red - **7/1** : white - **8** : bright chrome - **9** : orange

LED COLOUR

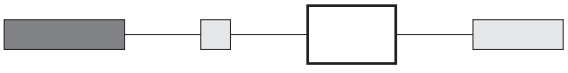

L0S : red - **L0Y** : yellow - **L0G** : green - **L0B** : blue

OPTIONS

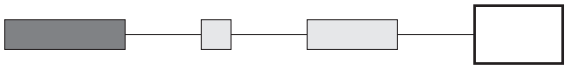

100 : Satin chrome bezel
101 : Bright chrome bezel

IP series

Latching action pushbutton switches for harsh environments

Square or round - non-illuminated

MODEL STRUCTURE

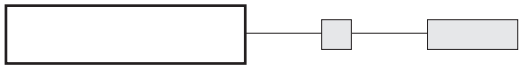

Square models



Solder lug terminals
IPC1SAD OFF - ON

Wire lead terminals
IPC1FAD OFF - ON

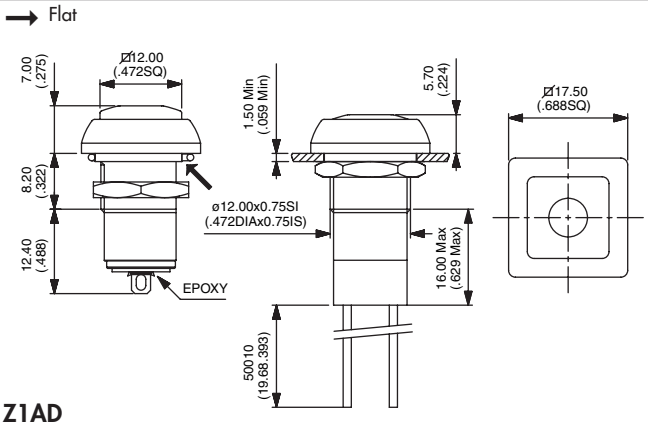

Also available with straight PC : **IPC1PAD** or quick-connect terminals : **IPC1Z1AD**

Round models



CURVED ACTUATOR
Solder lug terminals
IPR1SAD OFF - ON
Wire lead terminals
IPR1FAD OFF - ON

FLAT ACTUATOR
Solder lug terminals
IPP1SAD OFF - ON
Wire lead terminals
IPP1FAD OFF - ON

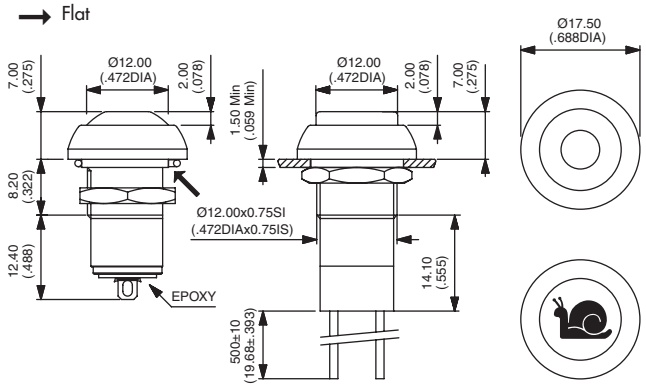

Also available with straight PC : **IP•1PAD** or quick-connect terminals : **IP•1Z1AD**

PLUNGER COLOUR

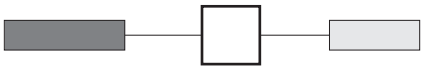

Plunger marking available on IPP models (symbol 10 mm max.). On request.

1 : blue - **1/4** : dark blue - **2** : black - **3** : green - **5** : yellow - **6** : red - **7/1** : white - **8** : bright chrome - **9** : orange

OPTIONS

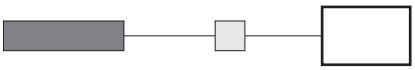

100 : Satin chrome bezel
101 : Bright chrome bezel
104 : High plunger (for round model only)

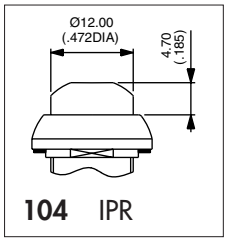

104 IPR

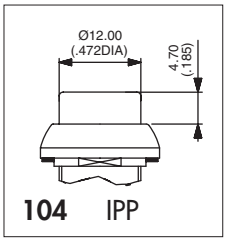

104 IPP

MOUNTING

Panel cut-out

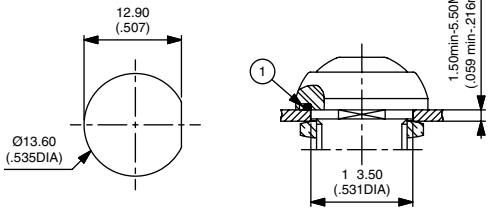

Matrix mounting

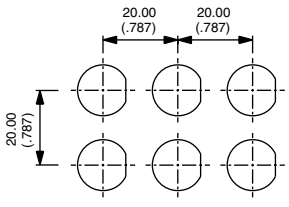

Back of panel space requirement

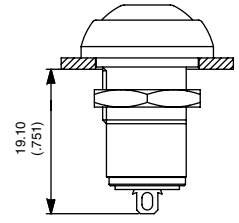

IP series

Momentary pushbutton switches for harsh environments

Distinctive features and specifications



- ❑ **Illuminated and non-illuminated**
- ❑ **Tactile feedback**
- ❑ **Wide variety of configurations**
- ❑ **Flat round actuator for optional marking** *New!*
- ❑ **Sealed to IP 67**

B

ENVIRONMENTAL SPECIFICATIONS

- Degree of protection : IP 67
- Shock resistance : 100 g according to IEC 512-4, test 6c
- Vibration resistance : 10-500Hz - 10 g according to IEC 512-4, test 6d
- Salt spray : IEC 512-6, test 11f
- Robustness (non-illuminated sw.) : IK06 according to EN 50102 (1 joule)
- Operating temperature : -40°C to +125°C

ELECTRICAL SPECIFICATIONS

- Max. current/voltage rating with resistive load : 500mA 48VAC - 200mA 50VDC - 200mA 250VAC
- Initial contact resistance : 100 mΩ max.
- Insulation resistance : 1 GΩ min. at 500VDC
- Dielectric strength : 1.500 VAC rms
- Electrical life at full load : 500.000 cycles
- Contact bounce : 10 ms

LED COMPONENT SPECIFICATIONS			
LED colour	Forward current	Forward Voltage	Max. lumin. intensity
Super red (L0S)	20mA	2V	125 mcd
Yellow (L0Y)	20mA	2V	125 mcd
Green (L0G)	10mA	2V	20 mcd
Blue (L0B)	10mA	3,5V	20 mcd
White (L0W)	20mA	3,5V	280 mcd

A resistor must be series-connected by the user.

Resistor value = $\frac{\text{supply voltage - LED forward voltage}}{\text{LED forward current}}$

GENERAL SPECIFICATIONS

- Panel thickness : 1,5 mm (.059) min. 4 mm (.157 max.)
- Total travel : 1,5 mm (.059)
- Operating force : 2N to 5N
- Mechanical life : 1.000.000 cycles
- Torque : 1,5 Nm max. applied to nut
- Soldering : 320°C max. for 3 sec.

MATERIALS

- Case : thermoplastic UL94-V0
- Plunger : polyamide 6/6
- Bushing/bezel : zinc die-cast (zamac), black painted
- Contacts : silver, gold plated
- Multi-wire lead AWG20, section 0,6 mm², UL approved
- LED wire : AWG26
- Lens : polycarbonate
- Terminal seal : epoxy

IP series

Momentary pushbutton switches for harsh environments

Overview

MODEL STRUCTURE

IP

SERIES

Bezel shape

- **C** Square
- **R** Round, curved
- **P** Round, flat

Electrical function

- **3** Normally open (NO)
- **5** NC/NO combined (non-illuminated)

Terminals

- **S** Solder lugs
- **F** Wire leads
- **P** Straight PC (non-illum.)
- **Z1** Quick-connect (non-ill., NO only)

Contacts

- **AD** Silver, gold plated

B

OPTIONS

Plunger colour

- **1** Blue
- **1/4** Dark blue
- **2** Black
- **3** Green
- **5** Yellow
- **6** Red
- **7/1** White
- **8** Bright chrome
- **9** Orange

LED colour

- **Blank** Non-illum.
- **L0S** Super red
- **L0Y** Yellow
- **L0G** Green
- **L0B** Blue
- **L0W** White

Options

- **100** Satin chrome bezel
- **101** Bright chrome bezel
- **104** High plunger (non-illum. round models only)

ABOUT THIS SERIES

On the following pages, you will find successively :
model structure of switches and options in the same order as in above chart

Dimensions : first dimensions are in mm while inches are shown as bracketted numbers.

NOTICE : please note that not all combinations of above numbers are available.
Refer to the following pages for further information.

A sealing boot is available to protect the switches against frost and sand. It is presented at the end of the series and in section H.

Mounting accessories : Standard hardware supplied : 1 hex nut 14 mm (.551) across flats and 1 O-ring.
The hex nut is presented in section I (part number U166).

Packaging unit : 25 pieces

IP series

Momentary pushbutton switches for harsh environments

Square - illuminated

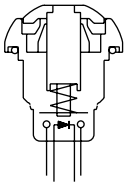

- High brightness illumination
- Five LED colours
- Tin plated LED terminals

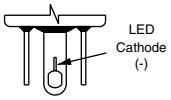

MODEL STRUCTURE

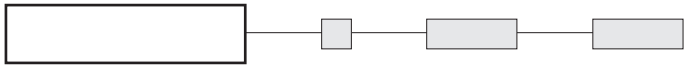

B

Solder lug terminals



IPC3SAD



Normally Open

→ Flat

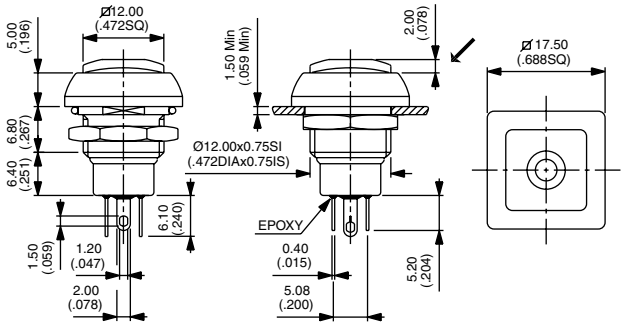

Sealed wire lead terminals



IPC3FAD



Normally Open

→ Flat

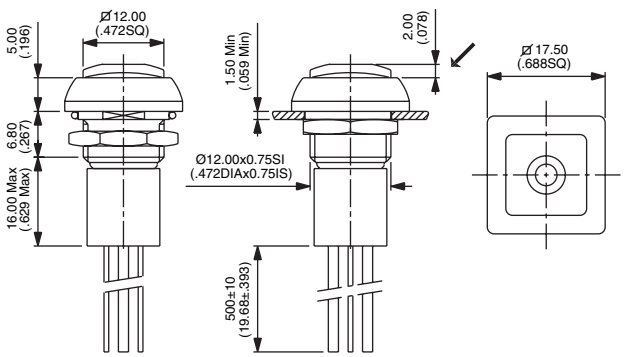

Wire colours : black : NO contact, red : LED anode(+), blue : LED cathode(-)

PLUNGER COLOUR



1 : blue - **1/4** : dark blue - **2** : black - **3** : green - **5** : yellow - **6** : red - **7/1** : white - **8** : bright chrome - **9** : orange

LED COLOUR

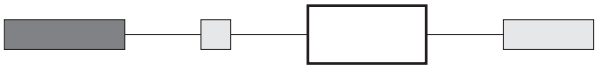

L0S : super red - **L0Y** : yellow - **L0G** : green
L0B : blue - **LOW** : white

OPTIONS

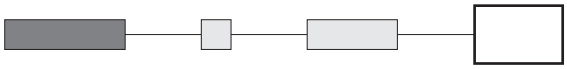

100 : Satin chrome bezel
101 : Bright chrome bezel

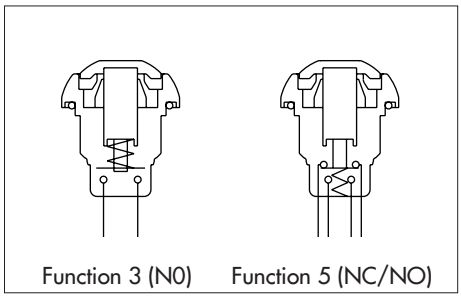

- Double function (NC/NO combined) with a short behind-panel depth

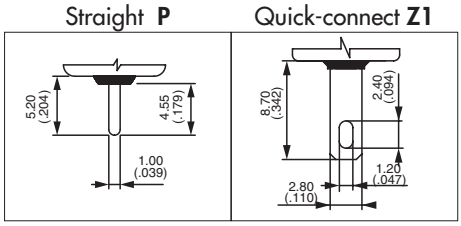

MODEL STRUCTURE

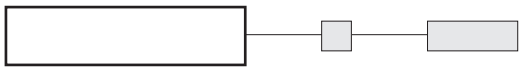

B

Solder lug terminals



IPC3SAD Normally Open

IPC5SAD NC/NO combined

→ Flat

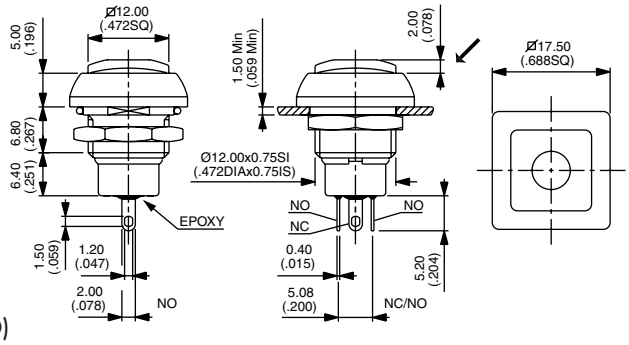

Also available with straight PC terminals : **IPC3PAD** (NO) or **IPC5PAD** (NC/NO) and quick-connect terminals : **IPC3Z1AD** (NO only)

Sealed wire lead terminals



IPC3FAD Normally Open

IPC5FAD NC/NO combined

→ Flat

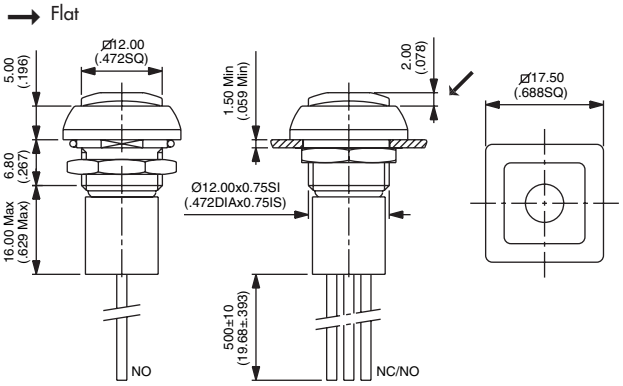

Wire colours (NC/NO) : black : NO, blue : NC

PLUNGER COLOUR

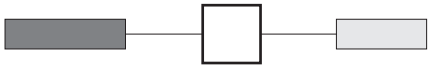

1 : blue - **1/4** : dark blue -**2** : black - **3** : green - **5** : yellow - **6** : red - **7/1** : white - **8** : bright chrome - **9** : orange

OPTIONS

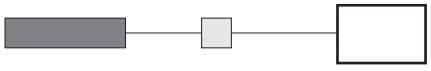

100 : Satin chrome bezel
101 : Bright chrome bezel

IP series

Momentary pushbutton switches for harsh environments

Round - illuminated

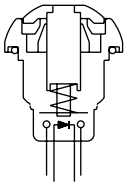

- High brightness illumination
- Five LED colours
- Tin plated LED terminals

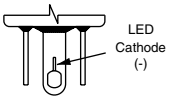

MODEL STRUCTURE

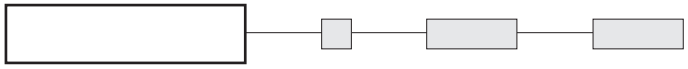

B

Solder lug terminals



IPR3SAD



Normally Open

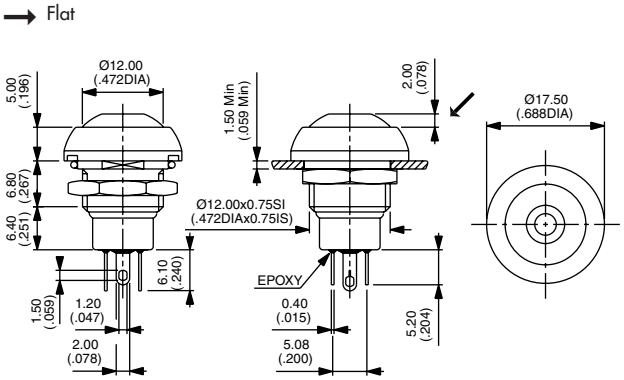

Sealed wire lead terminals



IPR3FAD



Normally Open

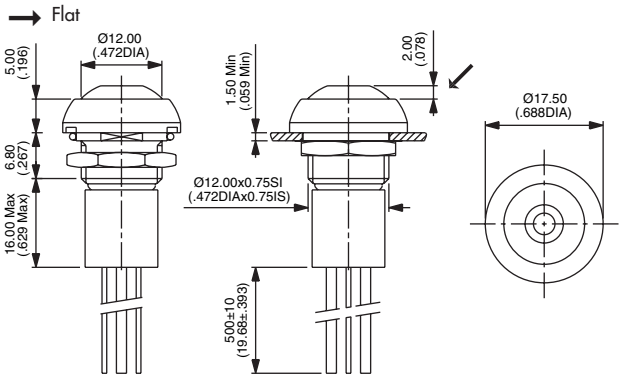

Wire colours : black : NO contact, red : LED anode(+), blue : LED cathode(-)

PLUNGER COLOUR



1 : blue - **1/4** : dark blue - **2** : black - **3** : green - **5** : yellow - **6** : red - **7/1** : white - **8** : bright chrome - **9** : orange

LED COLOUR

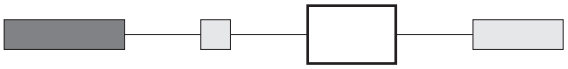

L0S : super red - **L0Y** : yellow - **L0G** : green
L0B : blue - **L0W** : white

OPTIONS

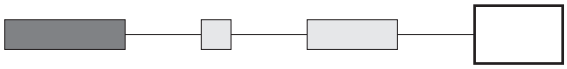

100 : Satin chrome bezel
101 : Bright chrome bezel

IP series

Momentary pushbutton switches for harsh environments

Round - non-illuminated

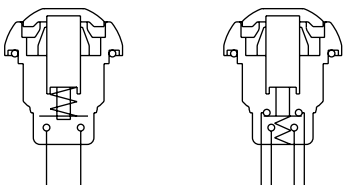

- Double function (NC/NO combined) with a short behind-panel depth

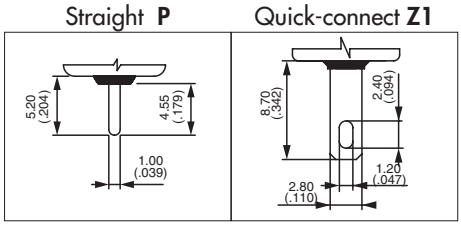

MODEL STRUCTURE

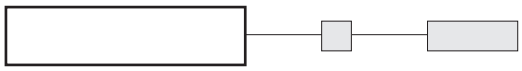

B

Solder lug terminals



Curved actuator, NO
IPR3SAD
Curved actuator, NC/NO
IPR5SAD

Flat actuator, NO
IPP3SAD
Flat actuator, NC/NO
IPP5SAD

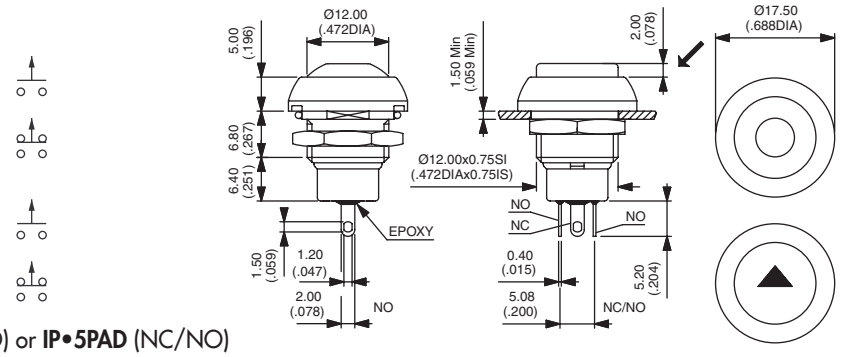

Also available with straight PC terminals : **IP•3PAD** (NO) or **IP•5PAD** (NC/NO) and quick-connect terminals : **IP•3Z1AD** (NO only)

Sealed wire lead terminals



Curved actuator, NO
IPR3FAD
Curved actuator, NC/NO
IPR5FAD

Flat actuator, NO
IPP3FAD
Flat actuator, NC/NO
IPP5FAD

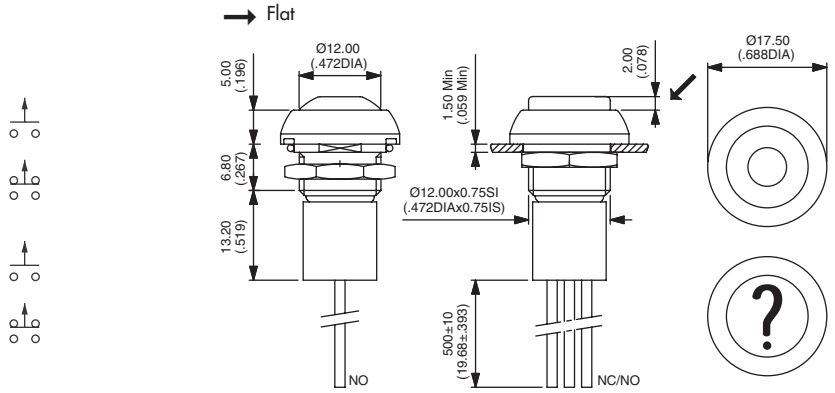

Wire colours (NC/NO) : black : NO, blue : NC

PLUNGER COLOUR

Plunger marking available on IPP models (symbol 10 mm max.). On request.

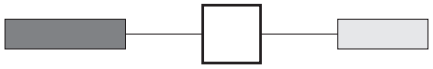

1 : blue - **1/4** : dark blue -**2** : black - **3** : green - **5** : yellow - **6** : red - **7/1** : white - **8** : bright chrome - **9** : orange

OPTIONS

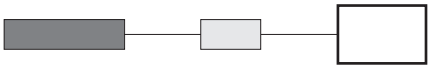

100 : Satin chrome bezel
101 : Bright chrome bezel
104 : High plunger

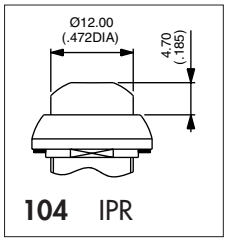

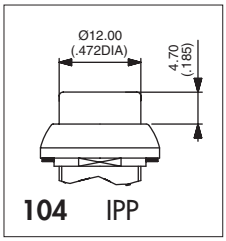

IP series

Momentary pushbutton switches for harsh environments

MOUNTING

Panel cut-out

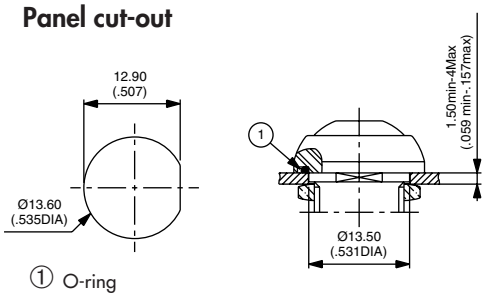

① O-ring

Matrix mounting

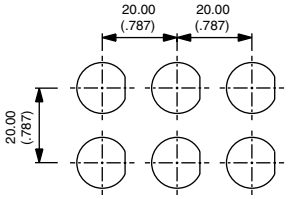

Back of panel space requirement

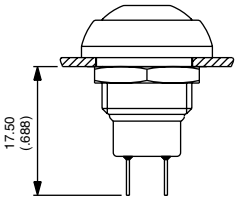

B

TACTILE FEEDBACK

Operating forces/ travels diagram
(indicative nominal curve)

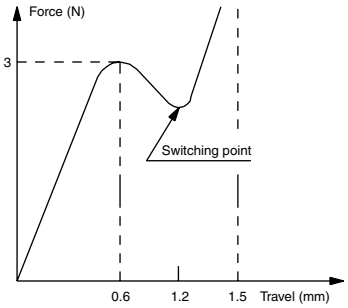

Cross section

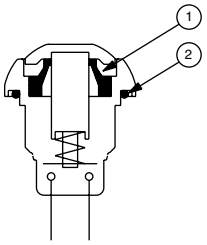

① Elastomeric membrane ② O-ring

SEALING

IP 67 for the whole series

Degree of protection provided by the enclosures of electric appliances according to IEC 529, DIN 40050 and NFC 20-010.

IP (ingress protection)	**6** Totally protected against dust	**7** Protected against the effects of immersion up to 1 m water (30 mn)
SOLDER LUG VERSION	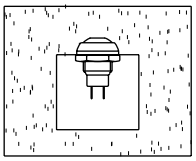	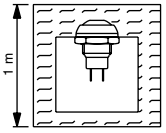
WIRE LEAD VERSION	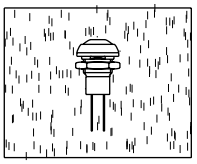	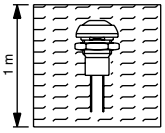

The above illustrations show non-illuminated models.

LUMINANCE MEASUREMENT MODE

TEST RESULTS *		
Led types	Luminance	Forward current
L0S (super red)	4000 Cd/m²	20mA
L0Y (yellow)	3500 Cd/m²	20mA
L0G (green)	400 Cd/m²	10mA

* in our lab conditions

For blue and white Led, consult factory.

Test conditions

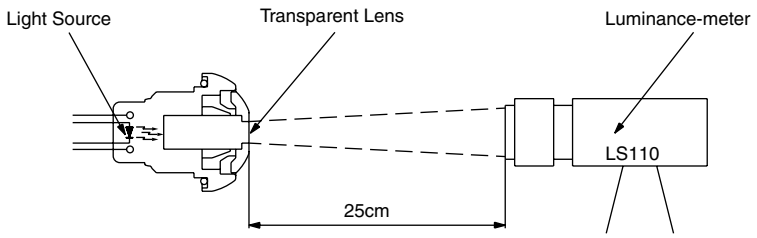

Measured in a dark room

ADDITIONAL SEALING

For ROUND plungers only, illuminated or non-illuminated.

By silicone boot for protection against frost and abrasion by sand. Order separately.
- transparent : **U5125**
- blue : **U5125-1**
- black : **U5125-2**
- red : **U5125-6**

Operating temperature : -40°C to +125°C
Life expectancy : 500.000 cycles

