E40159

Process adapter for small volumetric flow quantities

FLOW ADAPT SF PTFE

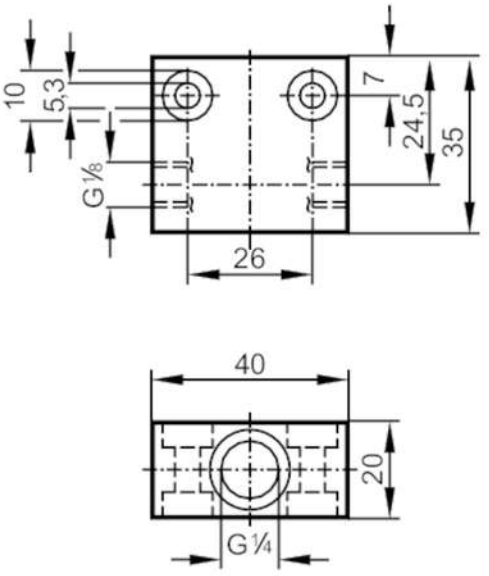

Application		
Design		for flow sensors with ceramic probe G¼
Installation		via internal G1/8A male thread, any mounting position
Medium temperature	[°C]	0...80
Pressure rating	[bar]	30
Measuring/setting range		
Flow range	[ml/min]	2...50
Tests / approvals		
Pressure Equipment Directive		A possible classification to PED depends on the application and has to be carried out by the user / operator.
Pressure Equipment Directive EAC		The adapter is intended for use in devices, machines and installations that do not fall under the categories of the technical rule TR CU 032/2013.
Safety instructions		The compatibility between medium and product material has to be checked in all applications.
Mechanical data		
Weight	[g]	48
Materials		PTFE
Sensor connection		G 1/4
Process connection		G 1/8
Remarks		
Remarks		Can only be used in combination with the flow sensor’s relative operating mode.
Pack quantity		1 pcs.