EIO404

Bluetooth mesh IoT base station

BLUETOOTH MESH IOT BASE STATION

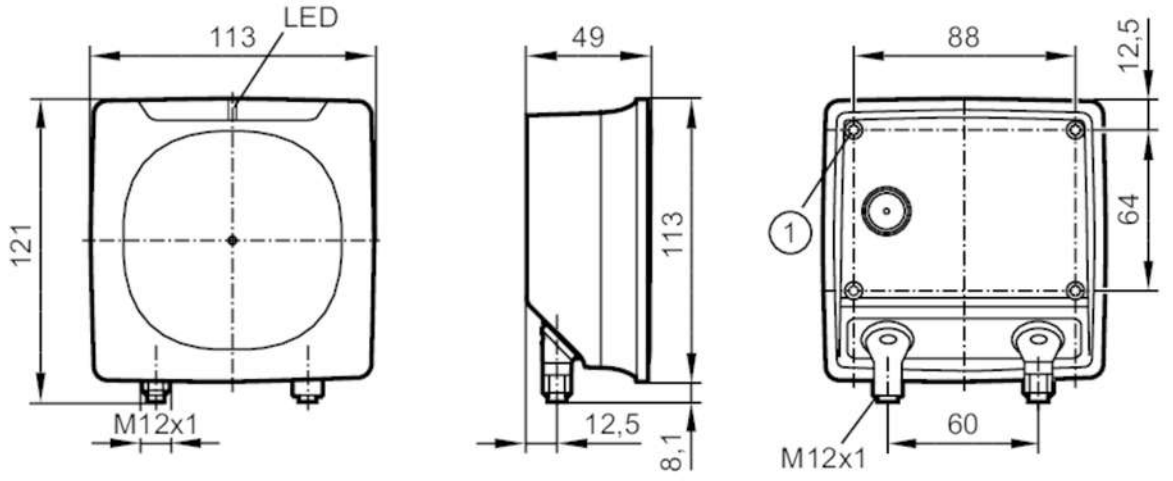

1 4 x M4 max. 15 mm deep 0.8 Nm

Application		
Special feature		Gold-plated contacts
Application		Base station for Bluetooth adapters. The data collected by the connected adapters can be retrieved via Ethernet using IoT Core; can be used with moneo Cloud in combination with moneo edgeGateway AE2100 or moneo on-premises (from version 1.15)
Radio approval for		EU/RED; Great Britain; USA; Canada; Japan; Namibia; Singapore; Australia; India; Vietnam; New Zealand; Indonesia; Malaysia; Thailand; Ukraine; Taiwan; Mexico; Argentina; Chile; South Korea; South Africa; China; Brazil
Note on radio approval		The list of countries applying the European Radio Equipment Directive 2014/53/EU (RED) can be found under “Downloads”.
Electrical data		
Operating voltage	[V]	18...30 DC; (limitation due to ES1 and PS2)
Nominal voltage DC	[V]	24
Current consumption	[mA]	< 100
Protection class		III
Reverse polarity protection		yes
Interfaces		
Communication interface		Ethernet; Bluetooth
Bluetooth		
Transmission standard		BLE 5.0
Frequency band		2,4 GHZ
Transmission power	[mW]	10; (10 dBm)
Range		typ. 20 m
Ethernet - Internet of Things		
Transmission standard		10Base-T; 100Base-TX
Transmission rate		10; 100
Protocol		MQTT JSON; IoT-Core
Factory settings		IP address: DHCP
		MAC address: see type label

EIO404

Bluetooth mesh IoT base station

BLUETOOTH MESH IOT BASE STATION

Operating conditions			
Ambient temperature	[°C]	-25...60	
Storage temperature	[°C]	-25...80	
Protection		IP 67	
Tests / approvals			
EMC		DIN EN 61000-6-2	
		DIN EN 61000-6-3	
Shock resistance		DIN EN 60068-2-27	40 g, 6 ms / bump
			50 g, 11 ms / single shock
Vibration resistance		DIN EN 60068-2-6	2 g (10...150 Hz)
MTTF	[years]	184	
UL approval		File number UL	E537924
Mechanical data			
Weight	[g]	469.4	
Materials		PBT; PC; stainless steel (316 / 1.4401); stainless steel (304CU/1.4567); brass; PU; PTFE; FKM	
Displays / operating elements			
Display		operation	LED, green
		warning / fault	LED, red
		Bluetooth	LED, blue
Remarks			
Pack quantity		1 pcs.	

Electrical connection - Spannungsversorgung

5	not used

Electrical connection - power supply

Connector: 1 x M12; coding: A; Contacts: gold-plated

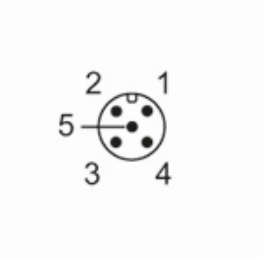

1	L+
2	not used
3	L-
4	not used

EIO404

Bluetooth mesh IoT base station

BLUETOOTH MESH IOT BASE STATION

Electrical connection - Ethernet

Connector: 1 x M12; coding: D; Contacts: gold-plated



1	TX +
2	RX +
3	TX -
4	RX -
	not used