DATASHEET - M22-AK01



Assembly of contact element with screw terminals and fixing adapter, 1 NC

Part no.	**M22-AK01**
Catalog No.	**216503**
Alternate Catalog No.	**M22-AK01Q**
EL-Nummer (Norway)	**4355431**

Delivery program

Basic function accessories			Contact elements
Description			Assembly of contact element with screw terminals and fixing adapter
Connection technique			Screw terminals
Fixing			Front fixing
Degree of Protection			IP20
Connection to SmartWire-DT			no
Contacts			
N/C = Normally closed			1 NC
Notes			= safety function, by positive opening to IEC/EN 60947-5-1
Actuator travel and actuation force as per DIN EN 60947-5-1, K.5.4.1			
	mm		4.8
Maximum travel	mm		5.7
Minimum force for positive opening	N		15
Contact sequence			
Contact travel diagram, stroke in connection with front element			
Contact diagram			
Configuration			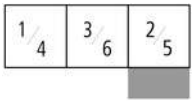
Connection technique			Screw terminals

Technical data

General

Standards			IEC 60947-5-1
Lifespan, mechanical	Operations	x 10^6	> 5
Operating frequency	Operations/h		≦ 3600
Actuating force		n	≦ 5
Degree of Protection			IP20
Climatic proofing			Damp heat, constant, to IEC 60068-2-78 Damp heat, cyclic, to IEC 60068-2-30
Ambient temperature			
Open		°C	-25 - +70
Terminal capacities		mm^2	
Solid		mm^2	0.75 - 2.5
Stranded		mm^2	0.5 - 2.5
Flexible with ferrule		mm^2	0.5 - 1.5

Contacts

Rated impulse withstand voltage	U_{imp}	V AC	6000
Rated insulation voltage	U_i	V	500
Overvoltage category/pollution degree			III/3
Control circuit reliability			
at 24 V DC/5 mA	H_F	Fault probability	< 10^{-7}, < 1 fault in 10^7 operations
at 5 V DC/1 mA	H_F	Fault probability	< 5 x 10^{-6}, < 1 failure in 5 x 10^6 operations
Max. short-circuit protective device			
Fuseless		Type	PKZM0-10/FAZ-B6/1
Fuse	gG/gL	A	10

Switching capacity

Rated operational current	I_e	A	
AC-15			
115 V	I_e	A	6
220 V 230 V 240 V	I_e	A	6
380 V 400 V 415 V	I_e	A	4
500 V	I_e	A	2
DC-13			
24 V	I_e	A	3
42 V	I_e	A	1.7
60 V	I_e	A	1.2
110 V	I_e	A	0.8
220 V	I_e	A	0.3
Lifespan, electrical			
AC-15			
230 V/0.5 A	Operations	x 10^6	1.6
230 V/1.0 A	Operations	x 10^6	1
230 V/3.0 A	Operations	x 10^6	0.7
DV-13			
12 V/2.8 A	Operations	x 10^6	1.2

Auxiliary contacts

Rated conditional short-circuit current	I_q	kA	1

Design verification as per IEC/EN 61439

Technical data for design verification			
Rated operational current for specified heat dissipation	I_n	A	6
Heat dissipation per pole, current-dependent	P_{vid}	W	0.11

Equipment heat dissipation, current-dependent	P_{vid}	W	0
Static heat dissipation, non-current-dependent	P_{vs}	W	0
Heat dissipation capacity	P_{diss}	W	0
Operating ambient temperature min.		°C	-25
Operating ambient temperature max.		°C	70
IEC/EN 61439 design verification			
10.2 Strength of materials and parts			
10.2.2 Corrosion resistance			Meets the product standard's requirements.
10.2.3.1 Verification of thermal stability of enclosures			Meets the product standard's requirements.
10.2.3.2 Verification of resistance of insulating materials to normal heat			Meets the product standard's requirements.
10.2.3.3 Verification of resistance of insulating materials to abnormal heat and fire due to internal electric effects			Meets the product standard's requirements.
10.2.4 Resistance to ultra-violet (UV) radiation			Meets the product standard's requirements.
10.2.5 Lifting			Does not apply, since the entire switchgear needs to be evaluated.
10.2.6 Mechanical impact			Does not apply, since the entire switchgear needs to be evaluated.
10.2.7 Inscriptions			Meets the product standard's requirements.
10.3 Degree of protection of ASSEMBLIES			Does not apply, since the entire switchgear needs to be evaluated.
10.4 Clearances and creepage distances			Meets the product standard's requirements.
10.5 Protection against electric shock			Does not apply, since the entire switchgear needs to be evaluated.
10.6 Incorporation of switching devices and components			Does not apply, since the entire switchgear needs to be evaluated.
10.7 Internal electrical circuits and connections			Is the panel builder's responsibility.
10.8 Connections for external conductors			Is the panel builder's responsibility.
10.9 Insulation properties			
10.9.2 Power-frequency electric strength			Is the panel builder's responsibility.
10.9.3 Impulse withstand voltage			Is the panel builder's responsibility.
10.9.4 Testing of enclosures made of insulating material			Is the panel builder's responsibility.
10.10 Temperature rise			The panel builder is responsible for the temperature rise calculation. Eaton will provide heat dissipation data for the devices.
10.11 Short-circuit rating			Is the panel builder's responsibility. The specifications for the switchgear must be observed.
10.12 Electromagnetic compatibility			Is the panel builder's responsibility. The specifications for the switchgear must be observed.
10.13 Mechanical function			The device meets the requirements, provided the information in the instruction leaflet (IL) is observed.

Technical data ETIM 7.0

Low-voltage industrial components (EG000017) / Auxiliary contact block (EC000041)

Electric engineering, automation, process control engineering / Low-voltage switch technology / Component for low-voltage switching technology / Auxiliary switch block (ecl@ss10.0.1-27-37-13-02 [AKN342013])

Number of contacts as change-over contact			0
Number of contacts as normally open contact			0
Number of contacts as normally closed contact			1
Number of fault-signal switches			0
Rated operation current Ie at AC-15, 230 V		A	6
Type of electric connection			Screw connection
Model			Top mounting
Mounting method			Front fastening
Lamp holder			None

Approvals

Product Standards			IEC/EN 60947-5; UL 508; CSA-C22.2 No. 14-05; CSA-C22.2 No. 94-91; CE marking
UL File No.			E29184
UL Category Control No.			NKCR
CSA File No.			012528
CSA Class No.			3211-03
North America Certification			UL listed, CSA certified
Degree of Protection			UL/CSA Type: -

Dimensions

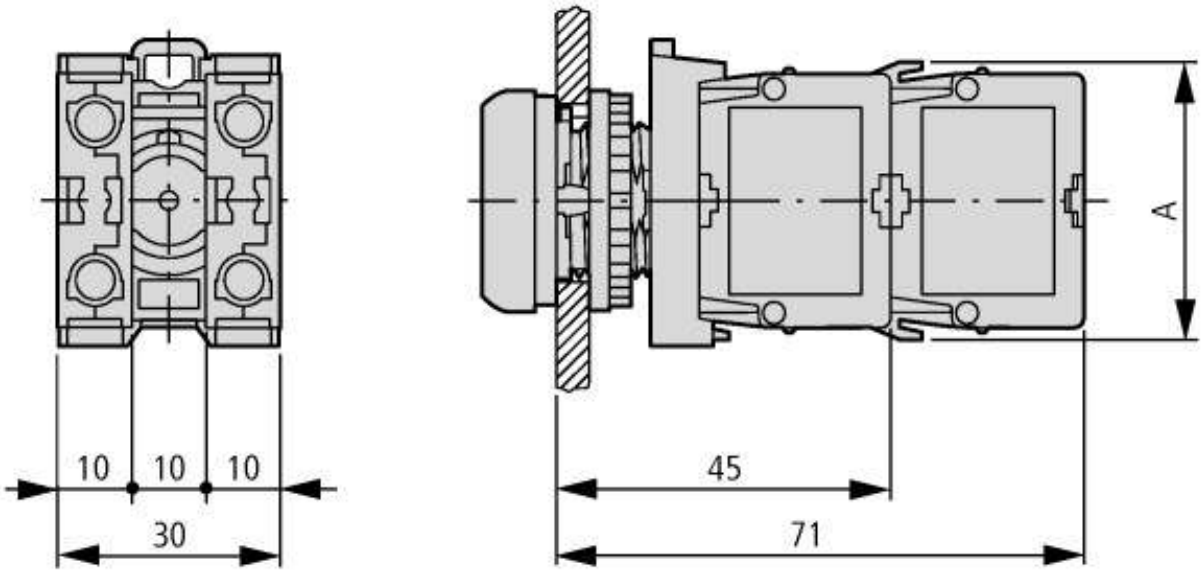

A = 37.2

© 05/2021 by Eaton Industries GmbH