Brand of NTN corporation

Technical data

UCF207

Bearing units



Grey cast housing, radial insert ball bearing with socket set screws,seal with slinger

KIT CONTENT

UC207G2, F207

VISUAL (S)

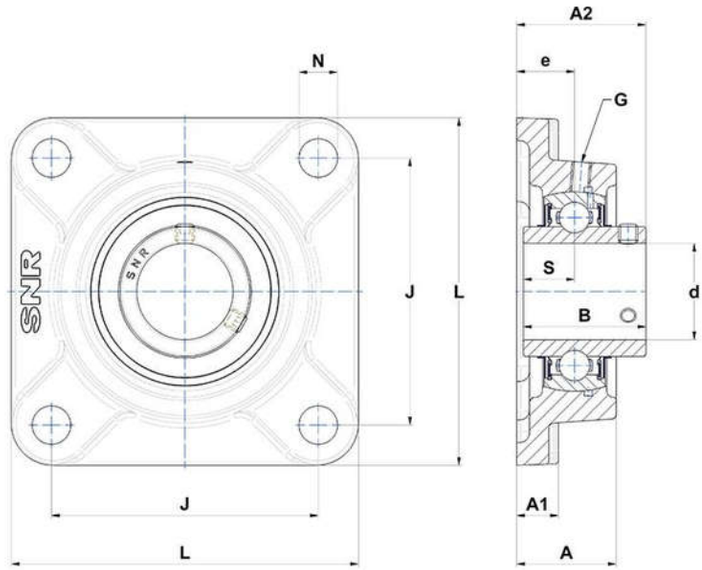

PRODUCT DEFINITION

Brand	SNR
A - Housing height	34 mm
A1 - Housing foot height / flange height	15 mm
A2 - Total height from mounting surface	44,4 mm
B - Width of Inner Ring	42,9 mm
d - Shaft diameter	35 mm

PRODUCT DEFINITION	
e - Distance mounting surface to bearing center	19 mm
G - Grease fitting	M6x1
J - Mounting holes distance	92 mm
L - Housing width / diameter	117 mm
N - Mounting hole dimension	14 mm
S - Distance front side/bearing centre	17,5 mm

PRODUCT PERFORMANCE	
C - Dynamic load rating	25700000 mN
C0 - Static load rating	15200000 mN
Operating temperature min.	253,15 °K
Operating temperature max.	373,15 °K

OTHER FEATURES	
Mass	1,5 kg
Recommended tightening torque for set screw	11.5 N-m