VEO

TIME RELAY / SINGLE-FUNCTION TIME RELAY

V2ZR10 24-240V AC/DC

Art.Nr.: 125120

V2ZR10P 24-240V AC/DC

Art.Nr.: 125620

- Off-Delay
- 10 time ranges
- Supply voltage 24-240V AC/DC
- 1 change-over contact
- Width 22,5 mm

Control elements

- Fine adjustment
- Setting of time range

Status indication

- LED U/t: Supply voltage
- LED R: Relay status



TECHNICAL DATA

SUPPLY CIRCUIT		
Terminals		A1-A2
Supply voltage		24 ... 240 V AC/DC
Supply voltage tolerance		-15 / +10 %
Rated frequency		50 / 60 Hz or DC
Rated frequency tolerance		48 ... 63 Hz
Rated consumption	230 V AC	typ. 0,4 W / 0,75 VA
	24 V DC	typ. 0,25 W / 0,25 VA
Standby consumption	230 V AC	typ. 0,16 W / 0,3 VA
	24 V DC	typ. 0,03 W / 0,09 VA
Duty-cycle		100%
Backup power time		< 30 ms
Recovery time		> 100 ms
Drop-out voltage		≥ 15,5 V

CONTROL INPUT		
Terminals		A1-B1
Function		start of function
Type		voltage controlled
Control voltage		see supply voltage
Minimum control pulse length	AC	min. 50 ms
	DC	min. 25 ms
Loadable		yes

V2ZR10 24-240V AC/DC
Art.Nr.: 125120

V2ZR10P 24-240V AC/DC
Art.Nr.: 125620

TIMING CIRCUIT

Time ranges	10	0,05 ... 1 s
		0,15 ... 3 s
		0,5 ... 10 s
		1,5 ... 30 s
		3 ... 60 s
		9 ... 180 s
		0,5 ... 10 min
		3 ... 60 min
		0,5 ... 10 h
		5 ... 100 h

RANGE OF FUNCTIONS

Functions	1	R

STATUS INDICATION

Supply voltage / time lapse	LED U/t (green) on	supply voltage applied
	LED U/t (green) flashes	indication of lapse of time
Relay status	LED R (yellow) on	output relay energized

OUTPUT CIRCUIT

Terminals		15-16-18
Kind of output		Relay
Number of contacts	change-over contact	1
Contact material		AgNi
Rated voltage (IEC 60947-5-1)		250 V
Maximum switching voltage		400 V AC
Minimum switching voltage / switching current		12 V / 10 mA
Rated current (IEC 60947-5-1)	AC-1	8 A / 250 V
	AC-15	1,5 A / 240 V (B300)
	DC-12	8 A / 24 V
Endurance	mechanical	30 x 10^6 switching cycles
	electrical (AC-1)	100 x 10^3 switching cycles
Rated frequency of operation	with load	6/min
	without load	1200/min
Fuse rating		8 A fast acting

V2ZR10 24-240V AC/DC
Art.Nr.: 125120

V2ZR10P 24-240V AC/DC
Art.Nr.: 125620

ACCURACY

Base accuracy		< 1 % (of full scale)
Setting accuracy		< 5 % (of full scale)
Repeat accuracy		< 0,5 % or ±5 ms
Temperature influence		< 0,01 % / °C
Voltage influence		-
Frequency influence		-

ENVIRONMENTAL CONDITIONS

Ambient temperature	operation	-25 ... +60 °C
	storage	-40 ... +70 °C
Relative humidity		5 ... 95 %
Vibration	EN 61812-1	10 ... 60 Hz: 0,15 mm; 60 ... 150 Hz: 20 m/s^2
	EN 60947-1	2 ... 13,2 Hz: 1 mm; 13,2 ... 100 Hz: 7 m/s^2
Shock	EN 60947-1	±150 m/s^2 11 ms

GENERAL DATA

Dimensions	W × H × D	22,5 × 67 × 76 mm
Mounting		DIN rail (EN60715)
Mounting position		any
Housing material		PA 66, self-extinguishing plastic, class V-0
Degree of protection	housing	IP40
	terminals	IP20
Electrical connection	V2ZR10	Screw terminal
Wire size	flexible with wire end ferrule	0,5 ... 2,5 mm^2 (20 AWG ... 13 AWG)
	flexible without wire end ferrule	0,5 ... 4 mm^2 (20 AWG ... 12 AWG)
	rigid	0,5 ... 4 mm^2 (20 AWG ... 12 AWG)
Stripping length		8 mm
Tightening torque		max. 1Nm
Electrical connection	V2ZR10P	Push-in terminal
Wire size	flexible with wire end ferrule	0,25 ... 1,5 mm^2 (24 AWG ... 16 AWG)
	flexible with plastic ferrule	0,25 ... 0,75 mm^2 (24 AWG ... 19 AWG)
	flexible without wire end ferrule	0,2 ... 1,5 mm^2 (24 AWG ... 16 AWG)
	rigid	0,2 ... 1,5 mm^2 (24 AWG ... 16 AWG)
Stripping length		8 mm

V2ZR10 24-240V AC/DC
Art.Nr.: 125120

V2ZR10P 24-240V AC/DC
Art.Nr.: 125620

GENERAL DATA		
MTTF		-
Weight		84 g

ISOLATION DATA		
Pollution degree (IEC 61812-1)		2
Overvoltage category (IEC 61812-1)		III
Rated insulation voltage (IEC 61812-1)	supply circuit / output cicuit	300 V
Rated impulse withstanding voltage (IEC 61812-1)	supply circuit / output cicuit	6 kV
Insulation test voltage (IEC 61812-1)	supply circuit / output cicuit	3200 V
Degree of protection	supply circuit / output cicuit	protective seperation

STANDARDS		
Product standard		IEC 61812-1
Interference immunity	IEC 61812-1	class A
Interference emission	IEC 61812-1	class A
Approvals		

V2ZR10 24-240V AC/DC
Art.Nr.: 125120

V2ZR10P 24-240V AC/DC
Art.Nr.: 125620

FUNCTIONS

OFF delay with control input (R)
The supply voltage U must be constantly applied to the device (green LED U/t illuminated). When the control contact S is closed, the output relay R switches into on-position (yellow LED illuminated). If the control contact is opened, the set interval t begins (green LED U/t flashes). After the interval t has expired (green LED U/t illuminated) the output relay switches into off-position (yellow LED not illuminated). If the control contact is closed again before the interval t has expired, the interval already expired is erased and is restarted.

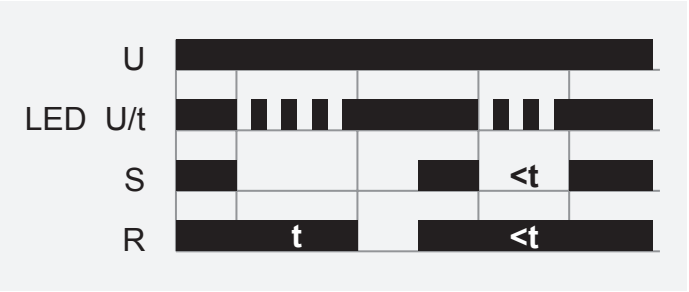

V2ZR10 24-240V AC/DC
Art.Nr.: 125120

V2ZR10P 24-240V AC/DC
Art.Nr.: 125620

CONNECTIONS

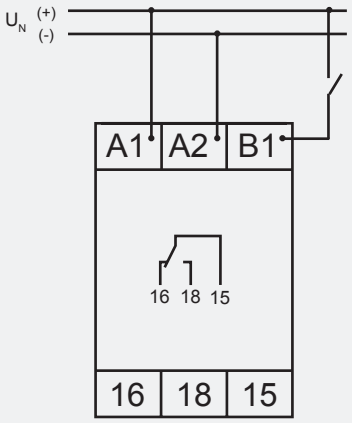

V2ZR10 24-240V AC/DC
Art.Nr.: 125120

V2ZR10P 24-240V AC/DC
Art.Nr.: 125620

DIMENSIONS

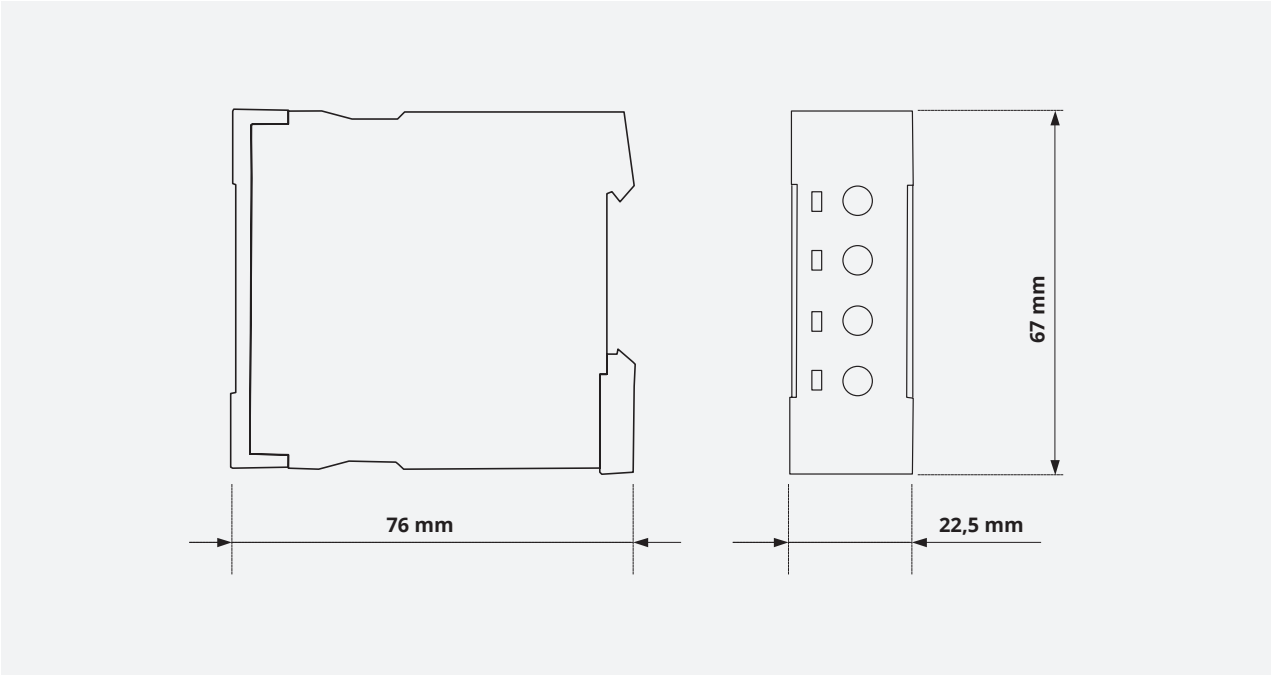

CONTACT

TELE Haase Steuergeräte Ges.m.b.H.

Vorarlberger Allee 38
1230 Vienna
Austria

CALL US +43 / 1 / 614 74 - 0

ONLINE SUPPORT info@tele-online.com