Brand of NTN corporation

Technical data

22213EAW33ZZ

Spherical roller bearings



[KIZEI] ULTAGE

VISUAL (S)

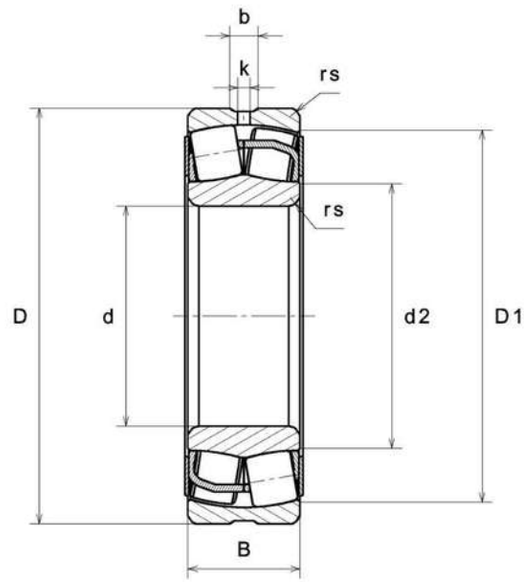

NTN Europe
1 rue des Usines · BP 2017 · 74010 Annecy Cedex · France · Tel. +33 (0)4 50 65 30 00
S.A. au capital de 322 639 919 € · RCS ANNECY B 325 821 072 · Id. Fiscale : FR 48 325 821 072
SIRET 325 821 072 00015 · Code APE 2815 Z · Code NACE 28.15

22213EAW33ZZ
Spherical roller bearings

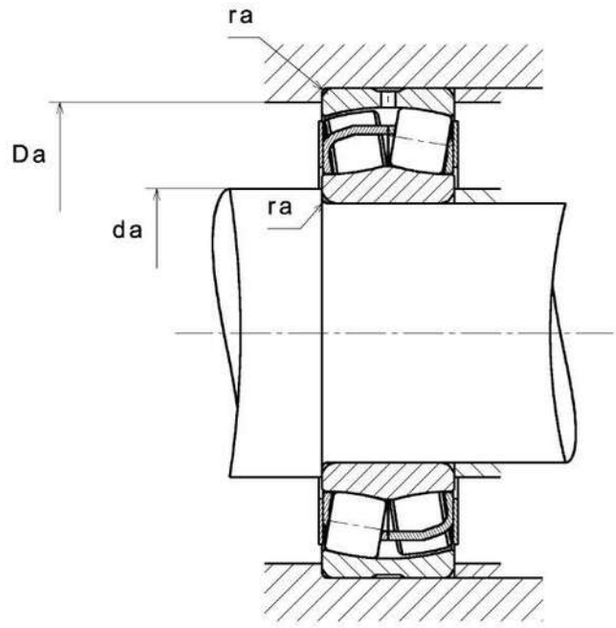

PRODUCT DEFINITION

Brand	SNR
d - Internal diameter	65 mm
D - External diameter	120 mm
B - Bearing/Inner ring width	31 mm
d2 - External diameter inner ring	78,2 mm
D1 - Inner diameter outer ring	107 mm
rs - Min fillet radius	1,5 mm
Number of lubrication holes	3
b - Groove width	7,83 mm
k - Hole diameter	3,5 mm
Radial clearance class	CN
Mass	1,57 kg

PRODUCT PERFORMANCE

22213EAW33ZZ
Spherical roller bearings

PRODUCT PERFORMANCE	
C - Dynamic load	226000000 mN
C0 - Static load	224000000 mN
Cu - Fatigue limit load	27300000 mN
e - Coefficient	0.24
Y0 - Static axial load coefficient	2.73
Y1 - Lower axial load coefficient	2.79
Y2 - Upper axial load coefficient	4.15
N ref - Reference thermal speed	31800 °/s
N lim - Mechanical Limit Speed	41400 °/s
Tmin - Min operating temperature	233,15 °K
Tmax - Max operating temperature	473,15 °K

BEARING FREQUENCIES	
BPFO - Over rolling frequency on outer ring (60 rpm)	7.596 Hz
BPFI - Over rolling frequency on inner (60 rpm)	10.404 Hz
BSF - Over rolling frequency on rolling element (60 rpm)	6.175 Hz
BRF - Rotational frequency – rolling element (60 rpm)	3.088 Hz
FTF - Rotational frequency - cage (60 rpm)	0.422 Hz

ABUTMENT	
da max - Max shoulder diameter IR	78,2 mm
da min - Min shoulder diameter IR	74 mm
db - Min diameter for Sleeve	0 mm
Da max - Max shoulder diameter OR	111 mm
ra max - Max shaft & housing fillet radius	1,5 mm

INDUSTRY CALCUL FACTORS

Equivalent dynamic radial load

$P = X.Fr + Y.Fa$

Fa / Fr ≤ e		Fa / Fr > e	
X	Y	X	Y
1	Y1	0.67	Y2

Equivalent static radial load

$Po = Xo.Fr + Yo.Fa$

X_0	Y_0
1	Y0

The values for e, Y1, Y2 and Y0 are shown in the above table .