EVC893

Connecting cable with plug

ASTGN040MSS0002K04

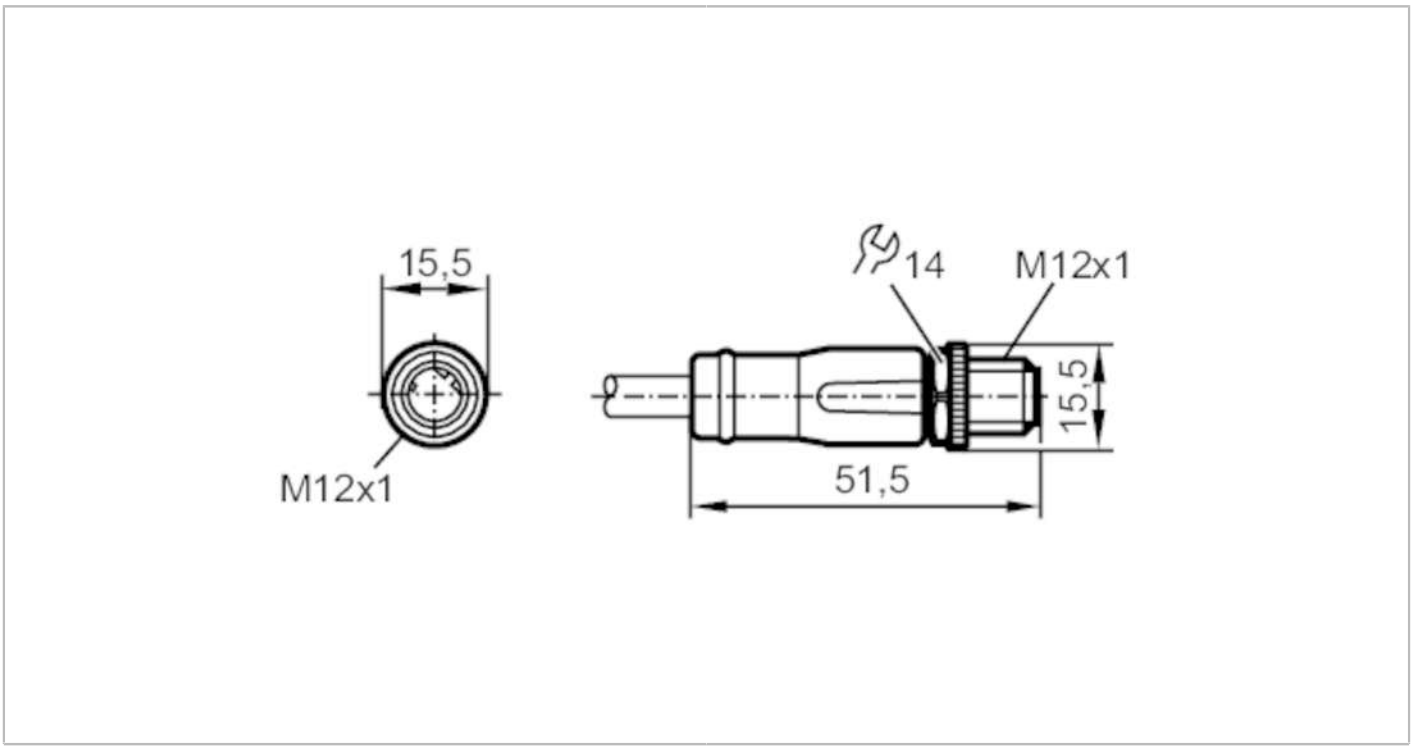

Application			
Special feature		Free from silicone; Halogen-free; Gold-plated contacts; Screened cable; Drag chain suitability	
Design		Ethernet cable, D-coded	
Application		Industrial Ethernet; CAT5/CAT5e; 100 Mbit/s; Industrial applications / factory automation	
Free from silicone		yes	
Electrical data			
Operating voltage	[V]	30 AC / 60 DC	
Protection class		III	
Max. current load total	[A]	4	
Operating conditions			
Ambient temperature	[°C]	-25...90	
Ambient temperature (moving)	[°C]	-25...90	
Protection		IP 65; IP 67	
Mechanical data			
Weight	[g]	143.6	
Moulded-body material		TPU	
Material nut		brass, nickel-plated	
Drag chain suitability		yes	
Drag chain suitability		bending radius for flexible use	min. 10 x cable diameter
		travel speed	max. 3.3 m/s for a horizontal travel length of 5 m and max. acceleration of 5 m/s²
		bending cycles	> 3 Mio.
		torsional strain	± 180 °/m

EVC893

Connecting cable with plug

ASTGN040MSS0002K04

Remarks

Pack quantity	1 pcs.

Electrical connection - plug

Connector: 1 x M12, straight; coding: D; Moulded body: TPU, black; Locking: brass, nickel-plated; Contacts: gold-plated; Tightening torque: 0.6...1.2 Nm; Shielded connection cable: screen connected

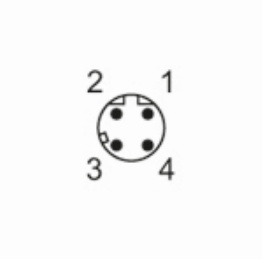

Electrical connection

Cable: 2 m, PUR, Halogen-free, green, Ø 6.5 mm, shielded; PROFINET Type C; 4 x 0.34 mm² (7 x Ø 0.25 mm)

Connection

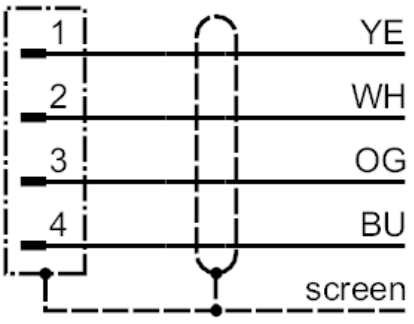

	Core colours :
BU =	blue
OG =	orange
WH =	white
YE =	yellow