VBRS4.4-2RKC4T-1/1/TEL
2-port Junction Systems – Y-splitter with Cable M12 × 1 male - 2 × M12 × 1 female

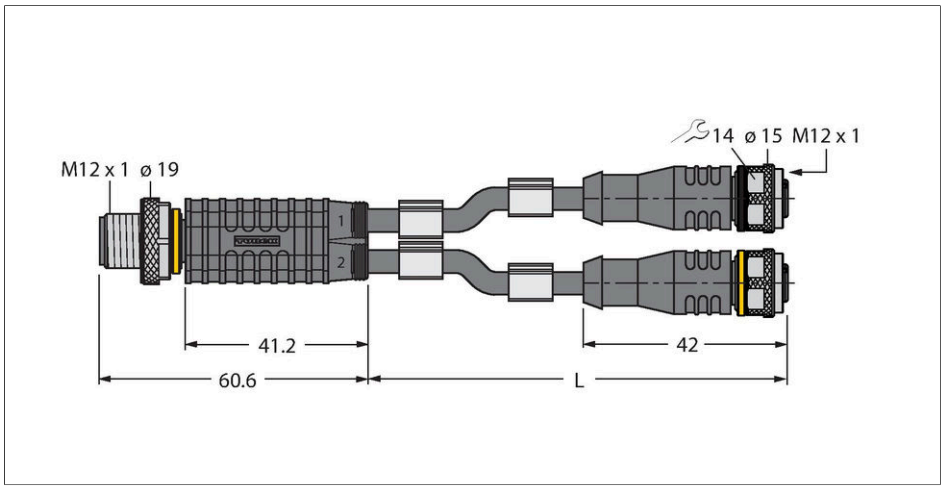



Technical data

Type	VBRS4.4-2RKC4T-1/1/TEL
ID no.	6628199
Distributed I/O	2
Connector A	Male, M12 × 1, Straight
Number of Pins	4
Contacts	Metal, CuZn, Gold-plated
Contact carriers	Plastic, TPU, Black
Connector body	Plastic, TPU, Black
Coupling nut/screw	Brass, CuZn, Nickel-plated
Tightening torque (range)	0.8 … 1 Nm (observe max. torque of mating connector!)
Mechanical lifespan	> 100 Mating cycles
Pollution degree	3
Type of protection	IP67, Only in screwed condition
Connector B	2 x Female, M12 × 1, Straight
Number of pins	3
Contacts	Metal, CuZn, Gold-plated
Contact carriers	Plastic, TPU, Black
Connector body	Plastic, TPU, Black
Coupling nut/retaining screw	Brass, CuZn, Nickel-plated
Seal	Plastic, FPM/FKM
Tightening torque	0.8 … 1 Nm (observe max. torque of mating connector!)
Mechanical lifespan	> 100 Mating cycles
Pollution degree	3

Features

- Jacket material: PVC
- Jacket color: black
- Resistant to chemicals and oils
- Flame-retardant
- Resistant to acids and alkaline solutions
- Resistant to microbes and hydrolysis
- LABS free
- RoHS-compliant
- Protection class IP67
- 4/3-pin
- Cable length: 1.0/1.0 meter

Cable Cross-Section

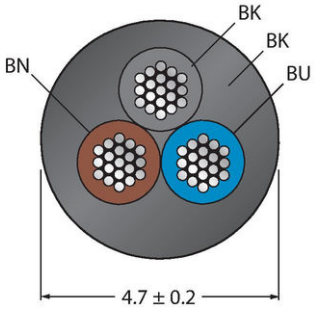

VBRS4.4-2RKC4T-1/1/TEL| 05-05-2021 07-27 | Technical modifications reserved

Technical data

Protection class	IP67, Only in screwed condition
Cable diameter	Ø 4.7 mm ± 0.20
Cable length	1 m 1 m
Cable jacket	PVC, Black
Core insulation	PVC
Core cross-section	3 x 0.34 mm²
Arrangement of strands	42 x 0.1 mm
Core colors	BN, BU, BK
Electrical properties at +20 °C	
Rated voltage	250 V
Test voltage	2000 V
Current	4 A
Insulation resistance	> 30.5 MΩ/km
forward resistance	max. 57 Ω/km
Mechanical and chemical properties	
Bending radius (stationary installation)	≥ 5 x Ø
Bending radius (flexible use)	≥ 10 x Ø
Ambient temperature range (stationary)	-40 °C…+105 °C
Ambient temperature range (In motion)	0 °C…+80 °C

Contact assignment



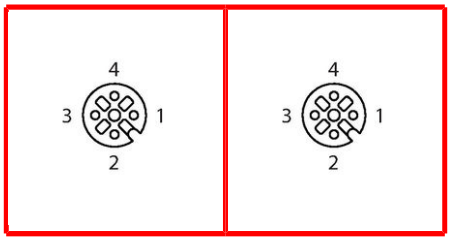

Pin Assignment

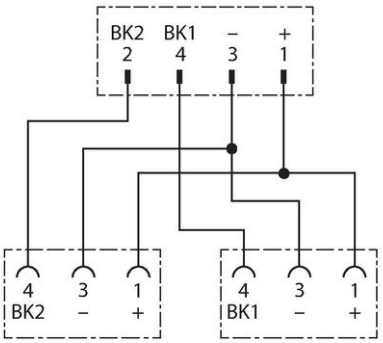

Accessories

TORQUE-WRENCH-SET-AS 6936170



Torque wrench set; handles with adjustable torque 0.4-1.0 Nm, torque wrench for M8 (SW9), fork wrench for M12 (SW 14)

BLANK-LABEL-FOR-CORDSETS-TEL-TXL 6936206

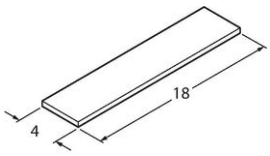

Label for TEL and TXL cables, length: 18 mm, height: 4 mm, material: polycarbonate (PC), color: white, halogen-free and flame-retardant

VBRS4.4-2RKC4T-1/1/TEL| 05-05-2021 07-27 | Technical modifications reserved