JUMO GmbH & Co. KG
Delivery address: Mackenrodtstraße 14,
36039 Fulda, Germany
Postal address: 36035 Fulda, Germany
Phone: +49 661 6003-0
Fax: +49 661 6003-607
e-mail: mail@jumo.net
Internet: www.jumo.net

JUMO Instrument Co. Ltd.
JUMO House
Temple Bank, Riverway
Harlow, Essex CM 20 2TT, UK
Phone: +44 1279 635533
Fax: +44 1279 635262
e-mail: sales@jumo.co.uk
Internet: www.jumo.co.uk

JUMO Process Control, Inc.
8 Technology Boulevard
Canastota, NY 13031, USA
Phone: 315-697-JUMO
1-800-554-JUMO
Fax: 315-697-5867
e-mail: info@jumo.us
Internet: www.jumo.us

JUMO VIBROtemp

Screw-in resistance thermometers with plug connector

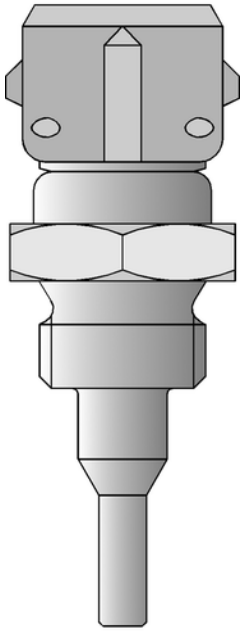

- **for temperatures from -50 to +300°C**
- **highly resistant to shock and vibration**
- **connector locked in for reliable contact, IP65 or IP69K protection**
- **available with transmitter**
- **GL approval for Type 902004/20 ...**

Shockproof screw-in resistance thermometers enable temperature measurement under pressure in motors, compressors, plant engineering and in ship building.
The connection between the protection fitting and the connecting cable incorporates a locking system and has IP65 or IP69K protection rating when assembled.

The measuring insert is normally fitted with a Pt100 temperature sensor to EN 60 751, Class B in 2-wire circuit. Versions with Pt500 or Pt1000 as well as semiconductor or NTC temperature sensors (only on Types 902004/10 and .../15) can also be supplied. With Types 902004/20 and .../21, there is a choice between 2-wire and 4-wire circuit connections. Types 902004/25 to .../29 are available with transmitter (output 4 – 20 mA).

Technical data

Connection	Type 902004/10 plug connector with gold-plated contacts, IP65 when assembled Type 902004/15 connector DIN 72 585, IP69K when assembled Types 902004/20, ... /25 and .../28, connector EN 175301-803, Pg9 Types 902004/21, ... /26 and .../29, connector EN 175301-803, Pg11 max. conductor cross-section 1.5 mm^2, IP65, ambient temperature -40 to +125°C, version with transmitter: ambient temperature -40 to +85°C	
Process connection	thread, stainless steel 1.4301 / 1.4571	
Protection tube	stainless steel 1.4301, 6 mm and 7.5 mm dia. stepped down to 4 mm brass 2.0401, 7.5 mm dia. stepped down to 4 mm stainless steel 1.4571, 8 mm and 6 mm dia. stepped down to 3.3 mm, pressure loading 50 bar max. at 200°C (Types 902004/20 and .../21)	
Measuring insert	Pt100 temperature sensor, EN 60 751, Class B in 2-wire circuit (replaceable on Types 902004/20 and .../21)[1]	
Protection	IP65, IP69K when assembled (Type 902004/15)	
Response times	Type 902004/10:	$t_{0.5}$ = 1.2 sec, $t_{0.9}$ = 6 sec, in water with 0.2 m/sec, 4 mm dia.
	Type 902004/15:	$t_{0.5}$ = 1.2 sec, $t_{0.9}$ = 6 sec, in water with 0.2 m/sec, 4 mm dia.
	Types 902004/20 and .../21:	$t_{0.5}$ = 15 sec, $t_{0.9}$ = 45 sec, in water with 0.2 m/sec, 8 mm dia.
		$t_{0.5}$ = 23 sec, $t_{0.9}$ = 59 sec, in oil with 0.2 m/sec, 8 mm dia.
	Types 902004/25 to .../29:	$t_{0.5}$ = <2 sec, $t_{0.9}$ = <4 sec, in water with 0.2 m/sec, 6 mm dia. stepped down to 3.3 mm
Vibration strength	Germanischer Lloyd Application Category D Characteristic 2	
Approvals	Types 902004/20 and .../21 GL Germanischer Lloyd	
Accessories	pockets, Data Sheet 90.9721 mating plug for Type 902004/10 with or without siliconized connecting cable, 2.5 m long, Data Sheet 90.9726, mating plug for Type 902004/15 on request mating plug for extra code 424 (machinery plug M 12x1) with PVC connecting cable, 2 m long	

[1] On Types 902004/20 and ... /21, short fitting lengths in conjunction with unfavorable installation conditions (heat conduction error) may result in the tolerance class being exceeded.

JUMO GmbH & Co. KG
Delivery address: Mackenrodtstraße 14,
36039 Fulda, Germany
Postal address: 36035 Fulda, Germany
Phone: +49 661 6003-0
Fax: +49 661 6003-607
e-mail: mail@jumo.net
Internet: www.jumo.net

JUMO Instrument Co. Ltd.
JUMO House
Temple Bank, Riverway
Harlow, Essex CM 20 2TT, UK
Phone: +44 1279 635533
Fax: +44 1279 635262
e-mail: sales@jumo.co.uk
Internet: www.jumo.co.uk

JUMO Process Control, Inc.
8 Technology Boulevard
Canastota, NY 13031, USA
Phone: 315-697-JUMO
1-800-554-JUMO
Fax: 315-697-5867
e-mail: info@jumo.us
Internet: www.jumo.us

Technical data

Transmitter	**Input**	
	Measurement input	Pt100 (EN 60 751)
	Measurement range limits	-50 to +260°C
	Measurement span	25 to 310°C (also see “zero point shift”)
	Zero point shift see Data Sheet 95.6530, page 7/10	on spans < 75°C fixed zero point setting: -40°C, -20°C, 0°C, 20°C, 40°C on spans ≥ 75°C: ±50°C
	Sensor current	≤ 0.5mA
	Sampling rate	continuous measurement because of analog signal path
	Measurement circuit monitoring	
	Underrange	falling to ≤ 3.6mA
	Overrange	rising to ≥ 22mA to < 28mA (24mA typical)
	Probe short circuit	≤ 3.6mA
	Probe and lead break	positive: ≥ 22mA to < 28mA (24mA typical)
	Output	
	Output signal	proportional DC current 4 – 20mA
	Transfer characteristic	linear with temperature
	Transfer accuracy	≤ ±0.1%
	Damping of ripple on 24V supply, amplitude 10V/50Hz, burden 470Ω/load 10MΩ	40dB
	Burden (Rb)	Rb = (Ub - 7.5V) / 22mA
	Burden error	≤ ±0.02% / 100Ω[1]
	Settling time on temperature change	≤10msec
	Calibration conditions	24V DC / approx. 22°C
	Calibration accuracy	≤ ±0.2%[1,2] or ≤ ±0.2°C
	Overall accuracy: sensor/calibration	±0.4°C (typical) at 20°C / 24V DC supply voltage
	Supply	
	Supply voltage (Ub)	7.5 – 30V DC
	Reverse polarity protection	yes
	Supply voltage error	≤ ±0.01% per V deviation from 24V[1]
	Ambient conditions	
	Operating temperature range	-40 to +85°C
	Storage temperature range	-40 to +100°C
	Temperature error	≤ ±0.01% per °C deviation from 22°C[1]
	Climatic conditions similar to EN 60 654 Class D1	relative humidity ≤ 95% annual mean, no condensation
	EMC interference emission/immunity	EN 61 326 Class B / to industrial requirements

[1] All data refer to the range-end-value 20 mA.

[2] The larger value applies.

JUMO GmbH & Co. KG
Delivery address: Mackenrodtstraße 14,
36039 Fulda, Germany
Postal address: 36035 Fulda, Germany
Phone: +49 661 6003-0
Fax: +49 661 6003-607
e-mail: mail@jumo.net
Internet: www.jumo.net

JUMO Instrument Co. Ltd.
JUMO House
Temple Bank, Riverway
Harlow, Essex CM 20 2TT, UK
Phone: +44 1279 635533
Fax: +44 1279 635262
e-mail: sales@jumo.co.uk
Internet: www.jumo.co.uk

JUMO Process Control, Inc.
8 Technology Boulevard
Canastota, NY 13031, USA
Phone: 315-697-JUMO
1-800-554-JUMO
Fax: 315-697-5867
e-mail: info@jumo.us
Internet: www.jumo.us

Connection diagram

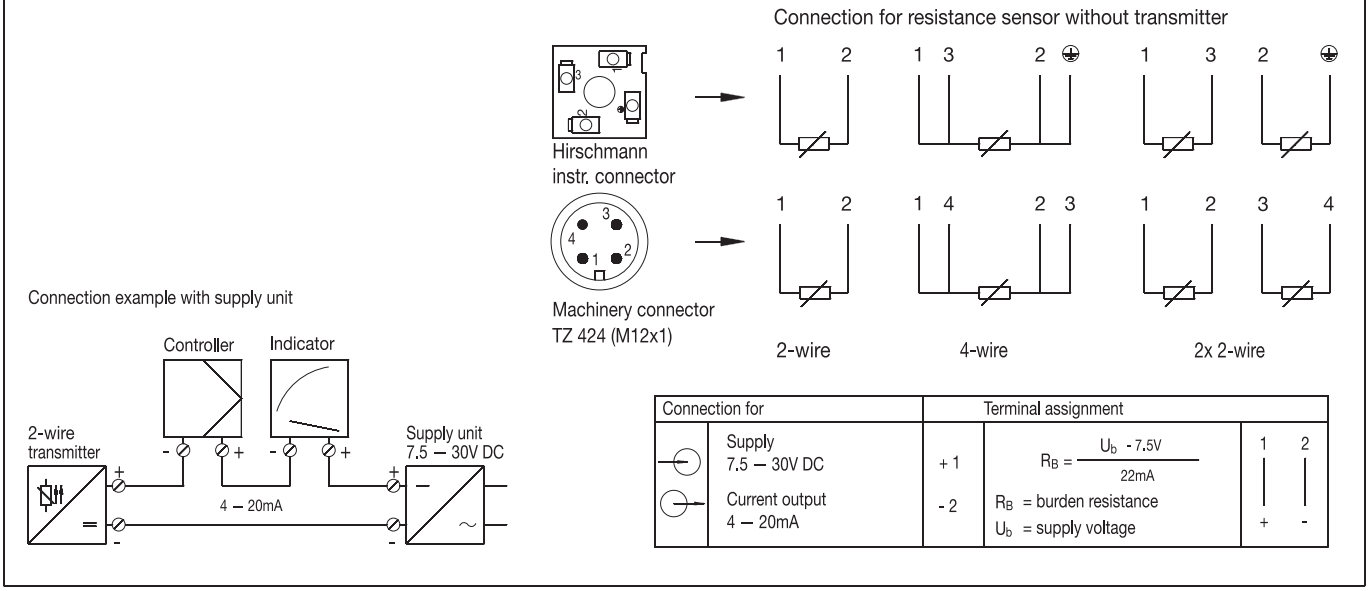

Connection for	Terminal assignment		
Supply 7.5 — 30V DC	+ 1	$R_B = \frac{U_b - 7.5V}{22mA}$	1 2
Current output 4 — 20mA	- 2	R_B = burden resistance U_b = supply voltage	+ -

JUMO GmbH & Co. KG
Delivery address: Mackenrodtstraße 14,
36039 Fulda, Germany
Postal address: 36035 Fulda, Germany
Phone: +49 661 6003-0
Fax: +49 661 6003-607
e-mail: mail@jumo.net
Internet: www.jumo.net

JUMO Instrument Co. Ltd.
JUMO House
Temple Bank, Riverway
Harlow, Essex CM 20 2TT, UK
Phone: +44 1279 635533
Fax: +44 1279 635262
e-mail: sales@jumo.co.uk
Internet: www.jumo.co.uk

JUMO Process Control, Inc.
8 Technology Boulevard
Canastota, NY 13031, USA
Phone: 315-697-JUMO
1-800-554-JUMO
Fax: 315-697-5867
e-mail: info@jumo.us
Internet: www.jumo.us

Dimensions

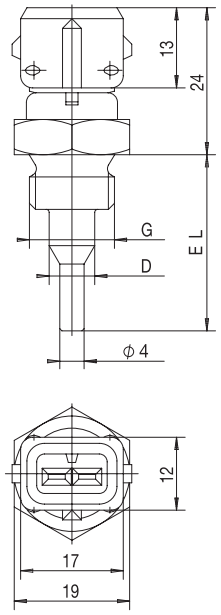

Type 902004/10

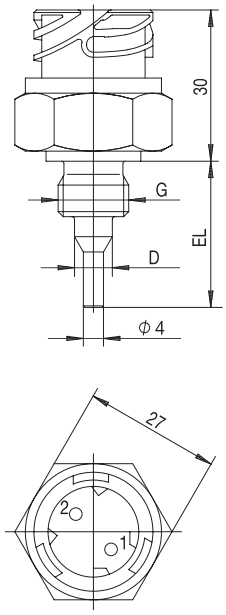

Type 902004/15

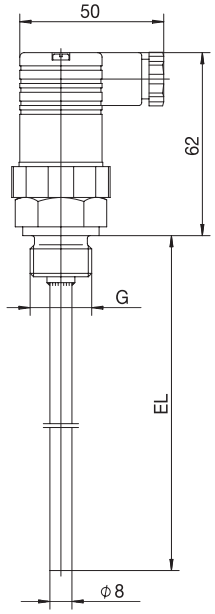

Type 902004/20
Type 902004/21

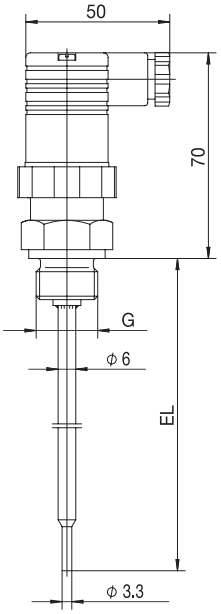

Type 902004/25
Type 902004/26

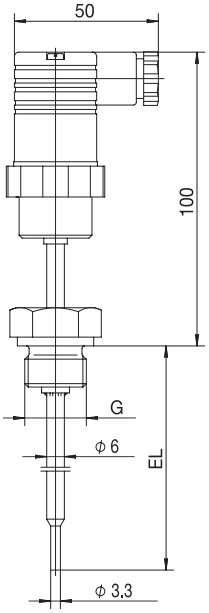

Type 902004/28
Type 902004/29

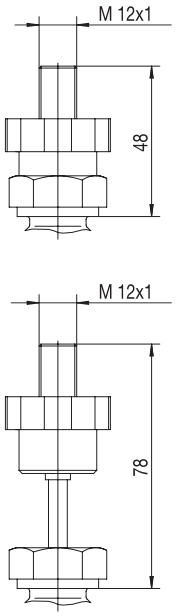

with extra code 424

JUMO GmbH & Co. KG
Delivery address: Mackenrodtstraße 14,
36039 Fulda, Germany
Postal address: 36035 Fulda, Germany
Phone: +49 661 6003-0
Fax: +49 661 6003-607
e-mail: mail@jumo.net
Internet: www.jumo.net

JUMO Instrument Co. Ltd.
JUMO House
Temple Bank, Riverway
Harlow, Essex CM 20 2TT, UK
Phone: +44 1279 635533
Fax: +44 1279 635262
e-mail: sales@jumo.co.uk
Internet: www.jumo.co.uk

JUMO Process Control, Inc.
8 Technology Boulevard
Canastota, NY 13031, USA
Phone: 315-697-JUMO
1-800-554-JUMO
Fax: 315-697-5867
e-mail: info@jumo.us
Internet: www.jumo.us

Order details: Screw-in resistance thermometers with plug connector

			(1)	**Basic version**
		902004/10		Screw-in resistance thermometer with plug connector
		902004/15		Screw-in resistance thermometer with connector DIN 72 585
			(2)	**Operating temperature in °C**
	x	384		-50 to +240°C
x		390		-50 to +300°C
			(3)	**Measuring insert**
x	x	1003		1 x Pt100 in 2-wire circuit
x	x	1004		1 x Pt500 in 2-wire circuit
x	x	1005		1 x Pt1000 in 2-wire circuit
x	x	1601		1 x KTY 11-6 in 2-wire circuit
			(4)	**Tolerance class to EN 60 751**
x	x	0		KTY temperature sensor
x	x	1		Class B (standard)
x	x	2		Class A
			(5)	**Protection tube diameter D in mm**
x	x	6		6mm with EL = 60mm
x	x	7.5		7.5mm stepped down to 4mm with EL = 29mm
			(6)	**Fitting length EL in mm**
x	x	29		29mm
x	x	60		60mm
			(7)	**Process connection**
x	x	103		G 3/8 thread
x	x	121		M 14x1.5 thread
x	x	141		1/8-27NPT thread
x	x	542		R 3/8 DIN 2999 thread
x	x	543		R 1/2 DIN 2999 thread, only with EL = 60mm
			(8)	**Protection tube material**
x	x	21		stainless steel 1.4301
x	x	50		brass 2.0401

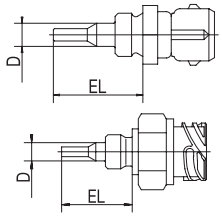

	(1)		(2)		(3)		(4)		(5)		(6)		(7)		(8)
Order code		-		-		-		-		-		-		-	
Order example	902004/10	-	390	-	1003	-	1	-	6	-	29	-	103	-	21

[1] List extra codes in sequence, separated by commas.

JUMO GmbH & Co. KG
Delivery address: Mackenrodtstraße 14,
36039 Fulda, Germany
Postal address: 36035 Fulda, Germany
Phone: +49 661 6003-0
Fax: +49 661 6003-607
e-mail: mail@jumo.net
Internet: www.jumo.net

JUMO Instrument Co. Ltd.
JUMO House
Temple Bank, Riverway
Harlow, Essex CM 20 2TT, UK
Phone: +44 1279 635533
Fax: +44 1279 635262
e-mail: sales@jumo.co.uk
Internet: www.jumo.co.uk

JUMO Process Control, Inc.
8 Technology Boulevard
Canastota, NY 13031, USA
Phone: 315-697-JUMO
1-800-554-JUMO
Fax: 315-697-5867
e-mail: info@jumo.us
Internet: www.jumo.us

Order details: Screw-in resistance thermometers with plug connector

(1) Basic version

902004/20 Screw-in resistance thermometer with terminal box, Pg9, to EN 175301-803 (DIN 43 650)

902004/21 Screw-in resistance thermometer with terminal box, Pg11, to EN 175301-803 (DIN 43 650)

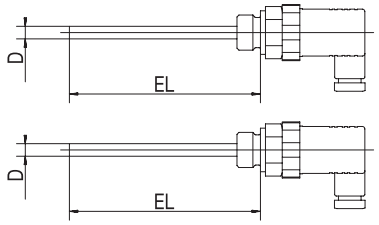

			(2) Operating temperature in °C
x	x	380	-50 to +200°C
			(3) Measuring insert
x	x	1003	1 x Pt100 in 2-wire circuit
x	x	1011	1 x Pt100 in 4-wire circuit
x	x	2003	2 x Pt100 in 2-wire circuit
			(4) Tolerance class to EN 60 751
x	x	1	Class B (standard)
x	x	2	Class A
			(5) Protection tube diameter D in mm
x	x	8	8mm
			(6) Fitting length EL in mm (50 ≤ EL ≤ 250)
x	x	50	50mm
x	x	100	100mm
x	x	150	150mm
x	x	200	200mm
x	x	250	250mm (without GL approval)
x	x	...	please specify in plain text (in 50mm steps)
			(7) Process connection
x	x	102	G 1/4 thread
x	x	103	G 3/8 thread
x	x	104	G 1/2 thread
x	x	126	M 18x1.5 thread
x	x	128	M 20x1.5 thread
x	x	144	1/2-14NPT thread
			(8) Protection tube material
x	x	26	stainless steel 1.4571
			(9) Extra code
x	x	000	no extra code
x	x	062	GL approval (max. fitting length EL = 200mm)
x		424	machinery plug M 12x1

	(1)		(2)		(3)		(4)		(5)		(6)		(7)		(8)		(9)	
Order code		-		-		-		-		-		-		-		/		,...
Order example	902004/20	-	380	-	1003	-	1	-	8	-	50	-	102	-	26	/	000[1]	

JUMO GmbH & Co. KG
Delivery address: Mackenrodtstraße 14,
36039 Fulda, Germany
Postal address: 36035 Fulda, Germany
Phone: +49 661 6003-0
Fax: +49 661 6003-607
e-mail: mail@jumo.net
Internet: www.jumo.net

JUMO Instrument Co. Ltd.
JUMO House
Temple Bank, Riverway
Harlow, Essex CM 20 2TT, UK
Phone: +44 1279 635533
Fax: +44 1279 635262
e-mail: sales@jumo.co.uk
Internet: www.jumo.co.uk

JUMO Process Control, Inc.
8 Technology Boulevard
Canastota, NY 13031, USA
Phone: 315-697-JUMO
1-800-554-JUMO
Fax: 315-697-5867
e-mail: info@jumo.us
Internet: www.jumo.us

Order details: Screw-in resistance thermometers with plug connector

					(1) Basic version
				902004/25	Screw-in resistance thermometer with analog transmitter and terminal box Pg9 to EN 175301-803 (DIN 43 650) (please specifiy range in plain text)
				902004/26	Screw-in resistance thermometer with analog transmitter and terminal box Pg11 to EN 175301-803 (DIN 43 650) (please specifiy range in plain text)
				902004/28	Screw-in resistance thermometer with analog transmitter and terminal box Pg9 to EN 175301-803 (DIN 43 650), version with extension for elevated temperatures (please specifiy range in plain text)
				902004/29	Screw-in resistance thermometer with analog transmitter and terminal box Pg11 to EN 175301-803 (DIN 43 650), version with extension for elevated temperatures (please specifiy range in plain text)
					(2) Operating temperature in °C
x	x			370	-50 to +150°C
		x	x	386	-50 to +260°C
					(3) Measuring insert
x	x	x	x	1003	1 x Pt100 in 2-wire circuit
					(4) Tolerance class to EN 60 751
x	x	x	x	1	Class B (standard)
x	x	x	x	2	Class A
					(5) Protection tube diameter D in mm
x	x	x	x	6	6mm stepped down to 3.3mm
					(6) Fitting length EL in mm (50 ≤ EL ≤ 250)
x	x	x	x	50	50mm
x	x	x	x	100	100mm
x	x	x	x	150	150mm
x	x	x	x	200	200mm
x	x	x	x	250	250mm
x	x	x	x	...	please specify in plain text (in 50mm steps)
					(7) Process connection
x	x	x	x	102	G 1/4 thread
x	x	x	x	103	G 3/8 thread
x	x	x	x	104	G 1/2 thread
x	x	x	x	126	M 18x1.5 thread
x	x	x	x	128	M 20x1.5 thread
x	x	x	x	144	1/2-14NPT thread
					(8) Protection tube material
x	x	x	x	26	stainless steel 1.4571
					(9) Extra code
x	x	x	x	000	no extra code
x		x		424	machinery plug M 12x1

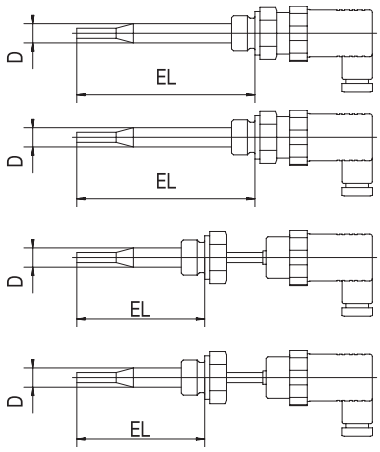

	(1)		(2)		(3)		(4)		(5)		(6)		(7)		(8)		(9)	
Order code		-		-		-		-		-		-		-		/		,...
Order example	902004/25	-	370	-	1003	-	1	-	6	-	50	-	102	-	26	/	000	

JUMO GmbH & Co. KG
Delivery address: Mackenrodtstraße 14,
36039 Fulda, Germany
Postal address: 36035 Fulda, Germany
Phone: +49 661 6003-0
Fax: +49 661 6003-607
e-mail: mail@jumo.net
Internet: www.jumo.net

JUMO Instrument Co. Ltd.
JUMO House
Temple Bank, Riverway
Harlow, Essex CM 20 2TT, UK
Phone: +44 1279 635533
Fax: +44 1279 635262
e-mail: sales@jumo.co.uk
Internet: www.jumo.co.uk

JUMO Process Control, Inc.
8 Technology Boulevard
Canastota, NY 13031, USA
Phone: 315-697-JUMO
1-800-554-JUMO
Fax: 315-697-5867
e-mail: info@jumo.us
Internet: www.jumo.us

Stock versions

(1)		(2)		(3)		(4)		(5)		(6)		(7)		(8)	Sales No.
902004/10	-	390	-	1003	-	1	-	7.5	-	29	-	121	-	21	90/00446901
902004/10	-	390	-	1003	-	1	-	7.5	-	29	-	121	-	50	90/00447301

Stock versions

(1)		(2)		(3)		(4)		(5)		(6)		(7)		(8)		(9)	Sales No.
902004/20	-	380	-	1003	-	1	-	8	-	50	-	104	-	26	/	000	90/00365259
902004/20	-	380	-	1003	-	1	-	8	-	100	-	104	-	26	/	000	90/00368414
902004/20	-	380	-	1003	-	1	-	8	-	150	-	104	-	26	/	000	90/00368416

Accessories

	Sales No.
Mating plug for Type 902004/10 with siliconized connecting cable, 2.5m long	90/00308880
Mating plug for Type 902004/15	90/00439715
Mating plug for extra code 424 (machinery plug M 12x1) with PVC connecting cable, 2m long	90/00404585