E11839

Cable protection

CABLE PROTECTION

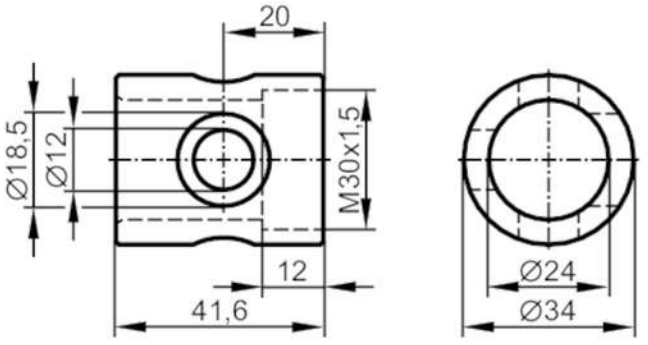

Application		
Design		only to be used with straight sockets or connection cable
Mechanical data		
Weight	[g]	97.9
Materials		stainless steel (1.4404 / 316L)
Sensor connection		threaded connection M30 x 1,5 internal thread
Remarks		
Pack quantity		1 pcs.