Brand of NTN corporation

# Technical data

## EXPE212

Bearing units



Grey cast housing, radial insert ball bearing with eccentric locking collar, seal with slinger

## KIT CONTENT

**EX212G2, PE212**

## VISUAL (S)

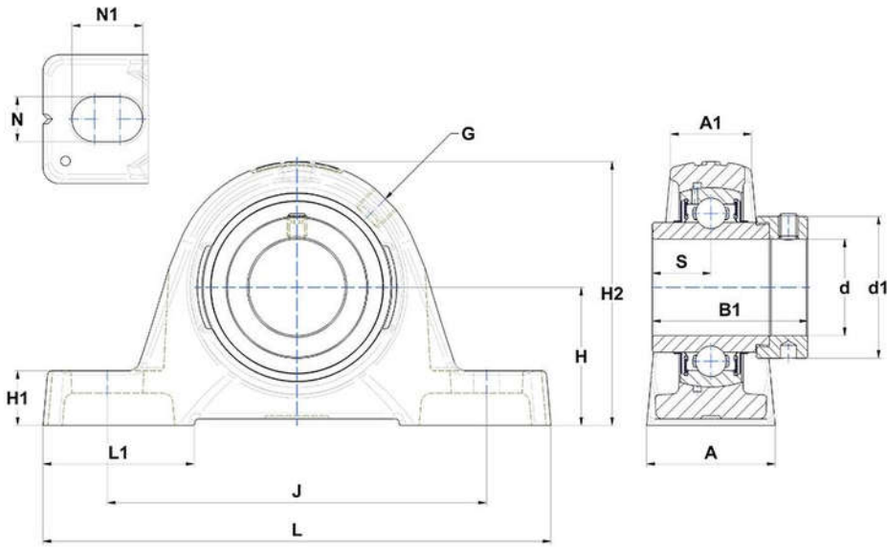


## PRODUCT DEFINITION

| | |
|---|---|
| **Brand** | SNR |
| **A - Housing width** | 60 mm |
| **A1 - Housing top width** | 42 mm |
| **B - Width of Inner Ring** | 61,8 mm |
| **d - Shaft diameter** | 60 mm |
| **d1 - Outer dia of eccent. Lock. collar / nut of adapter sleeve** | 82 mm |

# EXPE212
Bearing units

| PRODUCT DEFINITION | |
|---|---|
| **G - Grease fitting** | R1/8" |
| **H - Distance mounting base to centerline spheric. seating diam.** | 69,9 mm |
| **H1 - Housing foot height** | 25 mm |
| **H2 - Housing height** | 140 mm |
| **J - Mounting holes distance** | 190 mm |
| **L - Housing length** | 240 mm |
| **L1 - Housing foot length** | 71 mm |
| **N - Mounting hole dimension** | 18 mm |
| **N1 - Mounting hole length** | 28 mm |
| **S - Distance front side/bearing centre** | 30,9 mm |

| PRODUCT PERFORMANCE | |
|---|---|
| **C - Dynamic load rating** | 52500000 mN |
| **C0 - Static load rating** | 32800000 mN |
| **Operating temperature min.** | 253,15 °K |
| **Operating temperature max.** | 373,15 °K |

| OTHER FEATURES | |
|---|---|
| **Mass** | 5,17 kg |
| **Recommended tightening torque for set screw** | 22 N-m |