DATASHEET - XV-102-A0-35TQRB-1E4



Touch display for easyE4, 24 V DC, 3.5z, TFTcolor, ethernet

Part no. XV-102-A0-35TQRB-1E4
Catalog No. 198513

Powering Business Worldwide

Delivery program

Product range		Visualisation solutions XV
Product range		easyE4 XV-102
Subrange		Touch HMI easy
Function		Touch display for easyE4
Function		as a visualization for the easyE4 control relay
Description		Touch display for easyE4, 24 V DC, 3.5 inches, TFT color, 320x240 px, Ethernet Communication with the easyE4 via Modbus TCP
Common features of the model series		Ethernet interface USB device Slot for SD card
Display - Type		Color display, TFT
Touch-technology		Resistive-Touch
Number of colours		64 k Colours
Resolution	Pixel	QVGA 320 x 240
Screen diagonal	Inch	3.5
Model		Plastic enclosure and glass panel in plastic frame
Operating system		Windows CE 5.0 (licence incl.)
PLC-licence		no PLC function possible
License certificates for onboard interfaces		not expandable
built-in interfaces		1 x Ethernet 100base-TX/10base-T 1 x USB host 2.0
Front type		Standard front with standard membrane (fully enclosed)
Utilization		Flush mounting
Slots		for SD card: 1
Memory card automation		Optionally with SD card -> article no. 139807
Pluggable communication cards (optional)		no
Touch sensor		Glass with film
Heat dissipation	W	5
For use with		easyE4
For use with		EASY-E4-...-12...

Technical data

Display

Display - Type		Color display, TFT
Screen diagonal	Inch	3.5
Resolution	Pixel	QVGA 320 x 240
Visible screen area	mm	70 x 53
Number of colours		64 k Colours
Back-lighting		LED dimmable via software

Operation

Touch sensor		Glass with film

System

Processor		RISC CPU, 32 Bit, 400 MHz
Internal memory		DRAM (OS, Programm-, Datenspeicher): 256 MByte
External memory		SD Memory Card Slot: SDA Specification 1.00
Cooling		Fanless CPU and system cooling, natural convection-based passive cooling
Back-up of real-time clock		

Battery (service life)			non-replaceable, CR2032 soldered in

Engineering

Visualisation software			GALILEO
PLC-licence			no PLC function possible
Operating system			Windows CE 5.0 (licence incl.)

Interfaces, communication

built-in interfaces			1 x Ethernet 100base-TX/10base-T 1 x USB host 2.0
USB Host			USB 2.0 (1.5 - 12 Mbit/s), not galvanically isolated
Slots			for SD card: 1
Ethernet			100Base-TX/10Base-T

Power supply

Nominal voltage			24 V DC SELV (safety extra low voltage)
Note on power consumption			Basic device USB Slave to USB Host: 2.5 Total: 9.5
Heat dissipation		W	5
Note on heat dissipation			Heat dissipation with power consumption for 24 V, all ports and interfaces connected
Protection against polarity reversal			yes
Type of fuse			Yes (fuse not accessible)
Potential isolation			no potential isolation

General

Housing material			Plastic, gray
Front type			Standard front with standard membrane (fully enclosed)
Dimensions (W x H x D)		mm	136 x 100 x 30
flush mounted			Clearance: W x H x D ≥ 30 mm (1.18") Inclination from vertical: ±45° (if using natural convection)
Weight		kg	0.3
Degree of protection (IEC/EN 60529, EN50178, VBG 4)			IP65 (at front), IP20 (at rear)
Approvals			
Approvals			cUL (UL508) EAC
Applied standards and directives			
Explosion protection (relevant for CE)			EN 60079-0 EN 61241-1 EN 13463_x
Mechanical shock resistance		g	according to IEC 60068-2-27
Vibration			according to IEC/EN 60068-2-6
RoHS			conform

Environmental conditions

Climatic environmental conditions			
Air pressure (operation)		hPa	795 - 1080
Temperature			
Storage / Transport	ϑ	°C	-20 - +60
Operating ambient temperature min.		°C	0
Operating ambient temperature max.		°C	+ 50
Relative humidity			
Condensation			Take appropriate measures to prevent condensation
Relative humidity			10 - 90%, non condensing

Supply voltage U_{Aux}

Rated operational voltage	U_{Aux}	V	24 V DC (-20/+25%)
Protection against polarity reversal			Yes
Potential isolation			No

Design verification as per IEC/EN 61439

Technical data for design verification			
Static heat dissipation, non-current-dependent	P_{vs}	W	5
Operating ambient temperature min.		°C	0
Operating ambient temperature max.		°C	50

IEC/EN 61439 design verification			
10.2 Strength of materials and parts			
10.2.2 Corrosion resistance			Meets the product standard's requirements.
10.2.3.1 Verification of thermal stability of enclosures			Meets the product standard's requirements.
10.2.3.2 Verification of resistance of insulating materials to normal heat			Meets the product standard's requirements.
10.2.3.3 Verification of resistance of insulating materials to abnormal heat and fire due to internal electric effects			Meets the product standard's requirements.
10.2.4 Resistance to ultra-violet (UV) radiation			Please enquire
10.2.5 Lifting			Does not apply, since the entire switchgear needs to be evaluated.
10.2.6 Mechanical impact			Does not apply, since the entire switchgear needs to be evaluated.
10.2.7 Inscriptions			Meets the product standard's requirements.
10.3 Degree of protection of ASSEMBLIES			Meets the product standard's requirements.
10.4 Clearances and creepage distances			Meets the product standard's requirements.
10.5 Protection against electric shock			Does not apply, since the entire switchgear needs to be evaluated.
10.6 Incorporation of switching devices and components			Does not apply, since the entire switchgear needs to be evaluated.
10.7 Internal electrical circuits and connections			Is the panel builder's responsibility.
10.8 Connections for external conductors			Is the panel builder's responsibility.
10.9 Insulation properties			
10.9.2 Power-frequency electric strength			Is the panel builder's responsibility.
10.9.3 Impulse withstand voltage			Is the panel builder's responsibility.
10.9.4 Testing of enclosures made of insulating material			Is the panel builder's responsibility.
10.10 Temperature rise			The panel builder is responsible for the temperature rise calculation. Eaton will provide heat dissipation data for the devices.
10.11 Short-circuit rating			Is the panel builder's responsibility.
10.12 Electromagnetic compatibility			Is the panel builder's responsibility.
10.13 Mechanical function			The device meets the requirements, provided the information in the instruction leaflet (IL) is observed.

Technical data ETIM 7.0

PLC's (EG000024) / Graphic panel (EC001412)			
Electric engineering, automation, process control engineering / Display and control component / Panel (HMI) / Graphic panel (HMI) (ecl@ss10.0.1-27-33-02-01 [AFX016003])			
Supply voltage AC 50 Hz		V	0 - 0
Supply voltage AC 60 Hz		V	0 - 0
Supply voltage DC		V	20.4 - 28.8
Voltage type of supply voltage			DC
Number of HW-interfaces industrial Ethernet			1
Number of interfaces PROFINET			0
Number of HW-interfaces RS-232			0
Number of HW-interfaces RS-422			0
Number of HW-interfaces RS-485			0
Number of HW-interfaces serial TTY			0
Number of HW-interfaces USB			1
Number of HW-interfaces parallel			0
Number of HW-interfaces Wireless			0
Number of HW-interfaces other			0
With SW interfaces			Yes
Supporting protocol for TCP/IP			Yes
Supporting protocol for PROFIBUS			No
Supporting protocol for CAN			No
Supporting protocol for INTERBUS			No
Supporting protocol for ASI			No
Supporting protocol for KNX			No
Supporting protocol for MODBUS			Yes
Supporting protocol for Data-Highway			No
Supporting protocol for DeviceNet			No
Supporting protocol for SUCONET			No

Supporting protocol for LON		No
Supporting protocol for PROFINET IO		No
Supporting protocol for PROFINET CBA		No
Supporting protocol for SERCOS		No
Supporting protocol for Foundation Fieldbus		No
Supporting protocol for EtherNet/IP		Yes
Supporting protocol for AS-Interface Safety at Work		No
Supporting protocol for DeviceNet Safety		No
Supporting protocol for INTERBUS-Safety		No
Supporting protocol for PROFIsafe		No
Supporting protocol for SafetyBUS p		No
Supporting protocol for other bus systems		Yes
Radio standard Bluetooth		No
Radio standard WLAN 802.11		No
Radio standard GPRS		No
Radio standard GSM		No
Radio standard UMTS		No
IO link master		No
Type of display		TFT
With colour display		Yes
Number of colours of the display		65.536
Number of grey-scales/blue-scales of display		0
Screen diagonal	inch	3.5
Number of pixels, horizontal		320
Number of pixels, vertical		240
Useful project memory/user memory	kByte	64
With numeric keyboard		Yes
With alpha numeric keyboard		Yes
Number of function buttons, programmable		0
Number of buttons with LED		0
Number of system buttons		1
Touch technology		Resistive touch
With message indication		Yes
With message system (incl. buffer and confirmation)		Yes
Process value representation (output) possible		Yes
Process default value (input) possible		Yes
With recipes		Yes
Number of password levels		200
With printer output		Yes
Number of online languages		100
Additional software components, loadable		Yes
Degree of protection (IP), front side		IP65
Degree of protection (NEMA), front side		4X
Operation temperature	°C	0 - 50
Rail mounting possible		No
Wall mounting/direct mounting		No
Suitable for safety functions		No
Width of the front	mm	136
Height of the front	mm	100
Built-in depth	mm	25

Approvals

Product Standards		UL 60950-01; CSA-C22.2 No. 60950-1; IEC/EN 61131-2; CE marking
UL File No.		E208621
UL Category Control No.		NWGQ2

CSA File No.	UL report applies to both US and Canada
CSA Class No.	NWGQ8
North America Certification	UL recognized, certified by UL for use in Canada
Conditions of Acceptability	The investigated Pollution Degree is: 2 The following end-product enclosures are required: Fire The unit must be supplied via a SELV source. The provided Ethernet Connection is only allowed to connect to inhouse networks.
Specially designed for North America	No
Degree of Protection	IEC: IP65, UL/CSA Type: -

Dimensions

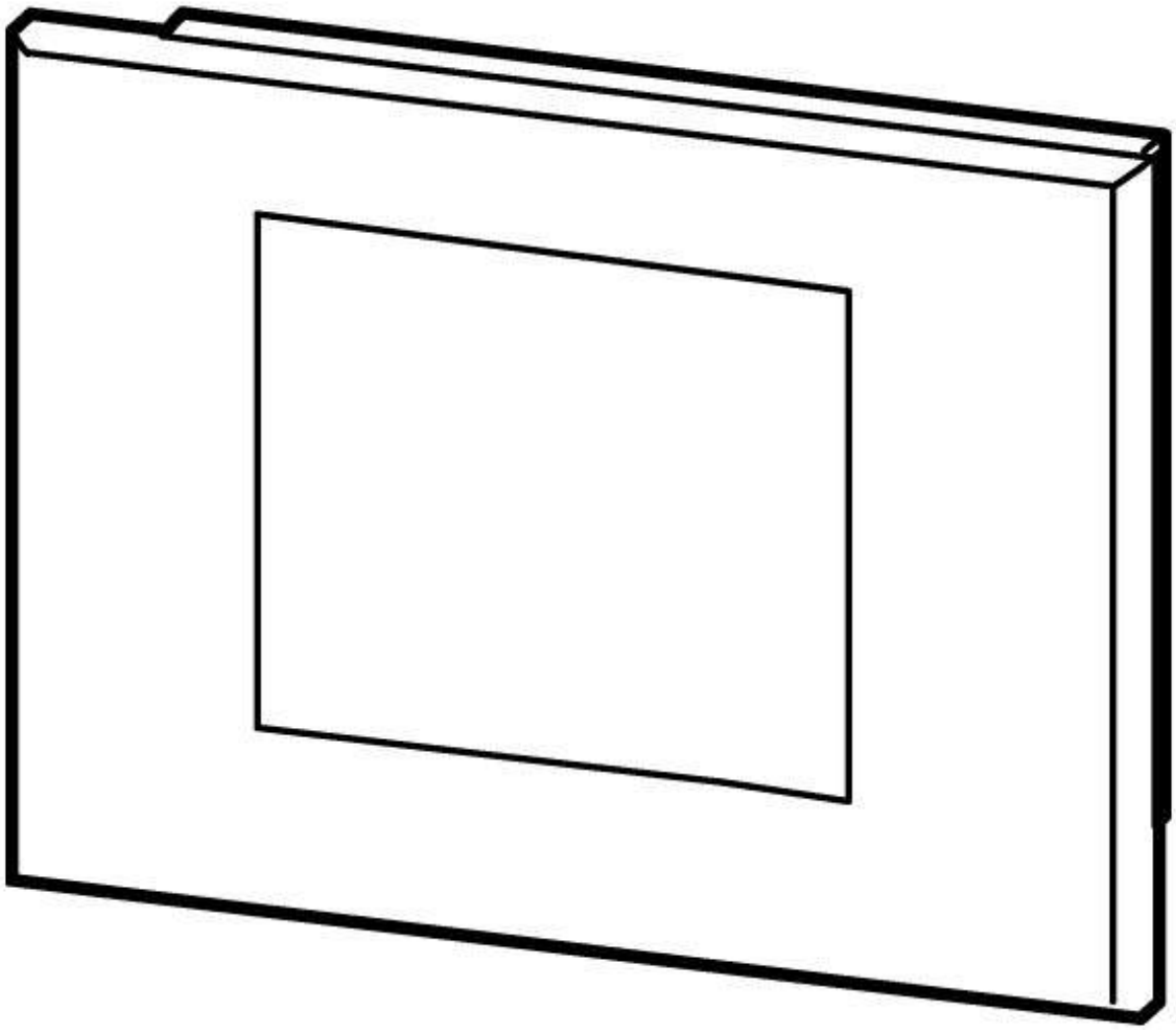

a1 = 5.35" (136 mm); a2 = 4.73" (121 mm); b1 = 3.94" (100 mm); b2 = 3.35" (85 mm); c1 = 1.18" (30 mm); c2 = 0.98" (25 mm)

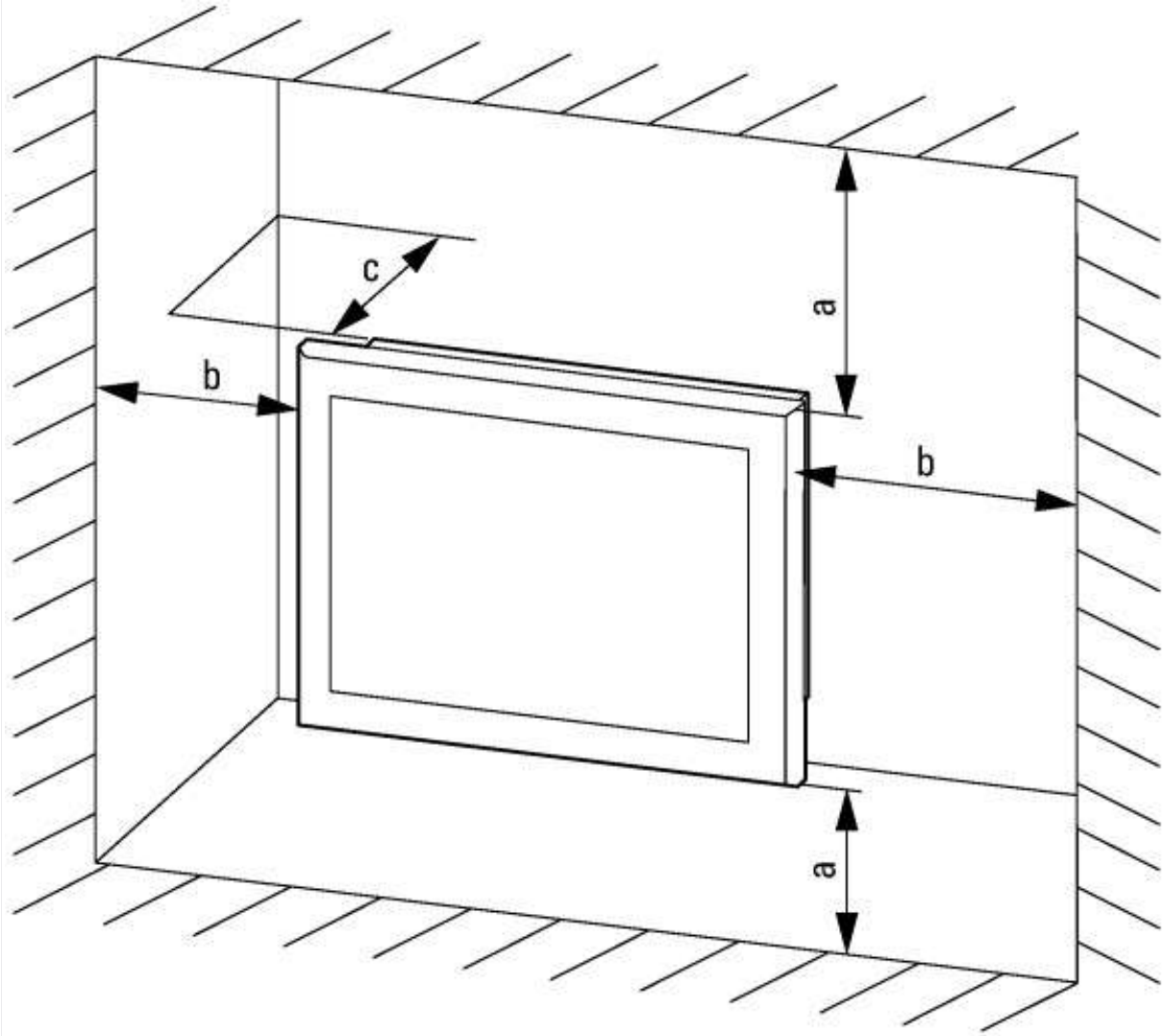

a, b, c ≧ 30 mm, ϑ 0 ≦ T ≦ 50 °C

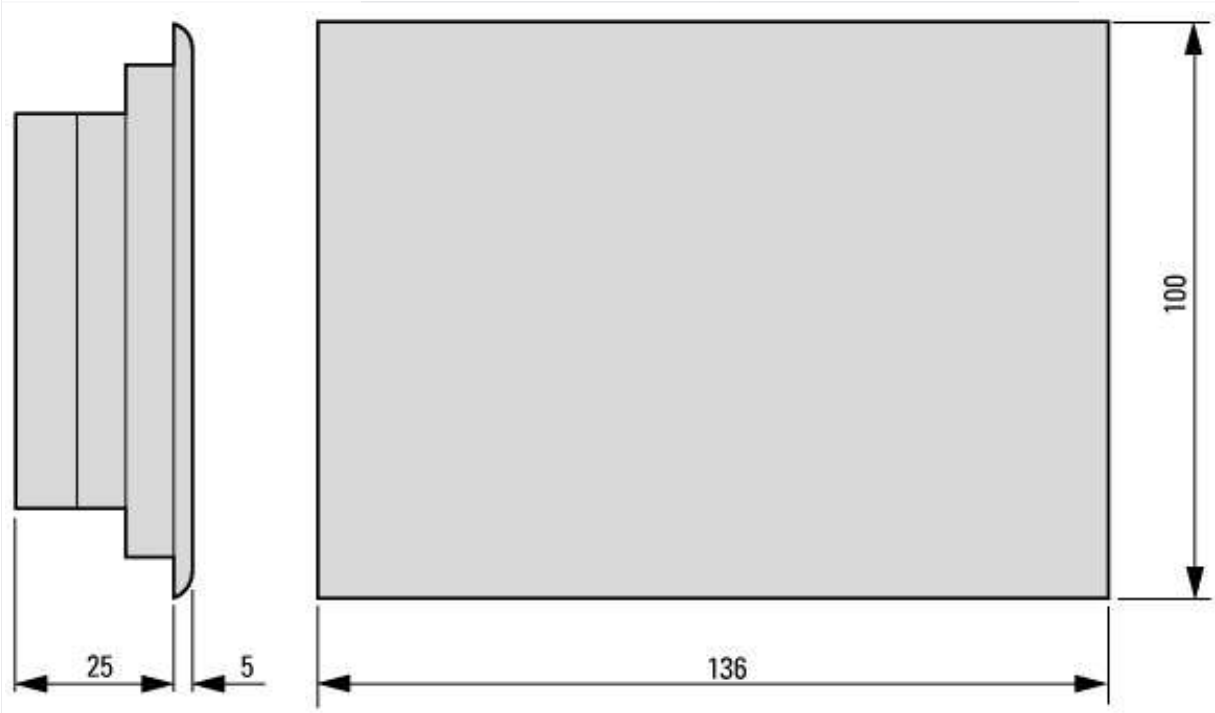

© 08/2021 by Eaton Industries GmbH