JUMO GmbH & Co. KG
Delivery address: Mackenrodtstraße 14
36039 Fulda, Germany
Postal address: 36035 Fulda, Germany
Phone: +49 661 6003-0
Fax: +49 661 6003-607
Email: mail@jumo.net
Internet: www.jumo.net

JUMO Instrument Co. Ltd.
JUMO House
Temple Bank, Riverway
Harlow, Essex, CM20 2DY, UK
Phone: +44 1279 63 55 33
Fax: +44 1279 62 50 29
Email: sales@jumo.co.uk
Internet: www.jumo.co.uk

JUMO Process Control, Inc.
6724 Joy Road
East Syracuse, NY 13057, USA
Phone: +1 315 437 5866
Fax: +1 315 437 5860
Email: info.us@jumo.net
Internet: www.jumousa.com

JUMO dTRANS p20

Process pressure transmitter

HART COMMUNICATION PROTOCOL

Brief description

The device with the HART® interface combines maximum precision with simple operation. It is used to measure the system pressure of gas, steam and liquids. The built-in LCD displays measured values and device data. The device can be installed up to zone 0 in the version with explosion protection "Ex ia (intrinsically safe)".

The housing and sensor are manufactured from high-grade stainless steel. Diaphragm seals can also be connected for specific process technology applications (see data sheets 409772 to 409784).

The pressure transmitter can be programmed and can therefore be flexibly adapted for various measuring tasks. There is an easy-to-use setup program available as an accessory for operation via interfaces. A rotary knob allows for quick and easy on-site manual operation.

The pressure transmitter with 4 to 20 mA and HART® protocol was evaluated with regard to functional safety and is certified by exida according to IEC 61508/-1/-2/-3. These measuring devices are suitable for monitoring process level and process pressure up to SIL2. Further details can be found in the Safety Manual.

For the "Ex d" explosion protection version, see data sheet 403026.

For the differential pressure version, see data sheet 403022.



Type 403025/0-0-1-...



Type 403025/0-0-2-...



Type 403025/0-0-3-...

Block diagram

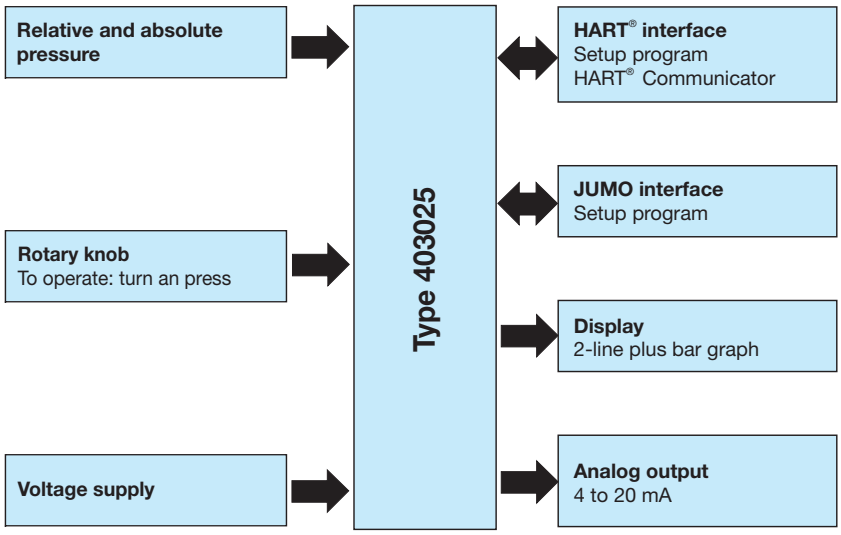

Special features

- Stainless steel case
- SIL certified (exida)
- HART® interface
- Explosion protection Ex ia (gas and dust) according to ATEX, NEPSI, and EAC
- Linearity 0.05 %
- Turn down: 1:50
- Up to 200 °C medium temperature
- Simple operation with rotary knob
- Setup program
- LCD display with bar graph
- Display scaling with a choice of measuring units
- Display of sensor temperature
- Display of minimum and maximum pressures
- Current-generator function

Approvals and approval marks (see technical data)

JUMO GmbH & Co. KG
Delivery address: Mackenrodtstraße 14
36039 Fulda, Germany
Postal address: 36035 Fulda, Germany
Phone: +49 661 6003-0
Fax: +49 661 6003-607
Email: mail@jumo.net
Internet: www.jumo.net

JUMO Instrument Co. Ltd.
JUMO House
Temple Bank, Riverway
Harlow, Essex, CM20 2DY, UK
Phone: +44 1279 63 55 33
Fax: +44 1279 62 50 29
Email: sales@jumo.co.uk
Internet: www.jumo.co.uk

JUMO Process Control, Inc.
6724 Joy Road
East Syracuse, NY 13057, USA
Phone: +1 315 437 5866
Fax: +1 315 437 5860
Email: info.us@jumo.net
Internet: www.jumousa.com

Technical data

General Information

Reference conditions	DIN EN 60770 and DIN EN 61298
Ambient temperature	22 °C ±5 K
Air pressure	1000 hPa (±25 hPa)
Voltage supply	DC 24 V
Burden	50 Ω
Sensor system	Silicon sensor with stainless steel separating diaphragm/thin film sensor
Pressure transfer medium	
For measuring system filling medium 0	Without transfer medium
For measuring system filling medium 1	Silicon oil, FDA compliant
Admissible load changes	> 10 million
Position	
Mounting position	Any
Calibration position	Device upright, process connection at the bottom
Zero offset depending on position	Relative pressure: a zero offset is possible on-site or via setup.
	Absolute pressure: manual readjustment is possible.
For medium temperature 1 (up to 120 °C)	≤ 1 mbar
For medium temperature 2 (up to 200 °C)	≤ 10 mbar
Display[a]	LCD, two-line with bar graph
Alignment	Display unit rotatable in 90° steps
	Housing rotatable ±160°
Size	Display 22 × 35 mm, font size 7 mm, 5 digits
Color	Black
Portrayable measuring units	
Input pressure	mH_2O, inH_2O, inHg, ftH_2O, mmH_2O, mmHg, psi, bar, mbar, kg/cm^2, kPa, Torr, MPa
Measured value	% or scaled with freely adjustable measuring unit
Output current	mA
Sensor temperature	°C, °F
Additional display data	Minimum pressure, maximum pressure, error, overrange, underrange, operating hours, device parameters
Operation	
On-site	With rotary knob and LCD
Setup program	Via interface
Interface	
Standard	JUMO interface[b]
For output 410 (4 to 20 mA with HART®)	JUMO interface[b] and HART® interface

[a] optional; SIL version only available with display

[b] The JUMO interface may not be used in a potentially explosive area! In such a case the device can be operated via the rotary knob or the HART® interface.

JUMO GmbH & Co. KG
Delivery address: Mackenrodtstraße 14
36039 Fulda, Germany
Postal address: 36035 Fulda, Germany
Phone: +49 661 6003-0
Fax: +49 661 6003-607
Email: mail@jumo.net
Internet: www.jumo.net

JUMO Instrument Co. Ltd.
JUMO House
Temple Bank, Riverway
Harlow, Essex, CM20 2DY, UK
Phone: +44 1279 63 55 33
Fax: +44 1279 62 50 29
Email: sales@jumo.co.uk
Internet: www.jumo.co.uk

JUMO Process Control, Inc.
6724 Joy Road
East Syracuse, NY 13057, USA
Phone: +1 315 437 5866
Fax: +1 315 437 5860
Email: info.us@jumo.net
Internet: www.jumousa.com

Input

Relative pressure				
Nominal measuring range	-600 to +600 mbar	-1 to +2.5 bar	-1 to +4 bar	-1 to +10 bar
Overload capability	6 bar	15 bar	30 bar	60 bar
Burst pressure	12 bar	30 bar	60 bar	100 bar
Relative pressure				
Nominal measuring range	-1 to +25 bar	-1 to +100 bar	-1 to +250 bar	-1 to +600 bar
Overload capability	150 bar	300 bar	600 bar	1200 bar
Burst pressure	250 bar	400 bar	700 bar	2000 bar

Absolute pressure						
Nominal measuring range	0 to 0.6 bar	0 to 2.5 bar	0 to 4 bar	0 to 10 bar	0 to 25 bar	0 to 100 bar
Overload capability	6 bar	15 bar	30 bar	60 bar	150 bar	300 bar
Burst pressure	12 bar	30 bar	60 bar	100 bar	250 bar	400 bar

Output

analog output	
For output 405 (4 to 20 mA)	4 to 20 mA, 2-wire
For output 410 (4 to 20 mA with HART®)	4 to 20 mA, two-wire with HART® version 7
Jump response time T60	≤ 190 ms without attenuation
Attenuation	Adjustable 0 to 100 s
Burden	
For output 405 (4 to 20 mA)	Burden ≤ (U_B-12 V) ÷ 0.022 A
For output 410 (4 to 20 mA with HART®)	Burden ≤ (U_B-12 V) ÷ 0.022 A; additional: min. 250 Ω, max. 1100 Ω

Voltage supply

For version	
Explosion protection 0 (without)	DC 12 to 36 V
Explosion protection 1 (ATEX Ex ia)	DC 12 to 28 V The voltage supply must be intrinsically safeand must not exceed the following maximum values: U_i ≤ DC 28 V I_i ≤ 115 mA P_i ≤ 750 mW C_i = 6 nF L_i = 105 µH

JUMO GmbH & Co. KG
Delivery address: Mackenrodtstraße 14
36039 Fulda, Germany
Postal address: 36035 Fulda, Germany
Phone: +49 661 6003-0
Fax: +49 661 6003-607
Email: mail@jumo.net
Internet: www.jumo.net

JUMO Instrument Co. Ltd.
JUMO House
Temple Bank, Riverway
Harlow, Essex, CM20 2DY, UK
Phone: +44 1279 63 55 33
Fax: +44 1279 62 50 29
Email: sales@jumo.co.uk
Internet: www.jumo.co.uk

JUMO Process Control, Inc.
6724 Joy Road
East Syracuse, NY 13057, USA
Phone: +1 315 437 5866
Fax: +1 315 437 5860
Email: info.us@jumo.net
Internet: www.jumousa.com

Mechanical features

Process connection	
Material 20 (stainless steel)	316 L for front-flush process connections Otherwise 316 Ti
Material 82 (stainless steel)	2.4819 NiMo
Surface	Ra ≤ 0.8 µm
Process seal	
Process connection 571 G 3/4 front-flush) and process connection 652 (tank connection with grooved union nut)	FPM
Process connection 997 (JUMO PEKA)	FDA compliant, see data sheet 409711
All other process connections	No seal
Measuring membranes	
Material 20 (stainless steel)	1.4542 for -1 to +250 bar relative pressure (measuring range 508) and -1 to +600 bar relative pressure (measuring range 516) Otherwise 316 L
Material 82 (stainless steel)	2.4819 NiMo[a]
Surface	Ra ≤ 0.8 µm
Housing	
Material	
Housing 1 (short, stainless steel)	Stainless steel 1.4404
Housing 2 (long, stainless steel)	Stainless steel 1.4404, VMQ
Housing 3 (precision casting)	Precision casting 1.4408
Lid 20 (stainless steel)	Precision casting 1.4408, seal FPM
Lid 85 (plastic)	PA, seal FPM
Electrical connection 36 (round plug M12 × 1)	Brass nickel-plated
Electrical connection 82 (cable fitting, plastic)	PA
Electrical connection 93 (cable fitting, metal)	Brass nickel-plated
Operation 0 (without control knob)	-
Operation 1 (with control knob)	PA
Explosion protection	
Explosion protection 0 (without)	The device is **not** approved for use in an Ex-area.
Explosion protection 1 (ATEX Ex ia)	EC type examination certificate SEV 09 ATEX 0138 X II 1/2G Ex ia IIC T6 ... T3 Ga/Gb II 1/2D Ex ia IIIC T105 °C Da/Db
Weight	
Type 403025/0-0-1 (housing short)	Approx. 550 g
Type 403025/0-0-2 (housing long)	Approx. 850 g
Type 403025/0-0-3 (housing precision casting)	Approx. 1600 g

[a] Not available in high-temperature version

JUMO GmbH & Co. KG
Delivery address: Mackenrodtstraße 14
36039 Fulda, Germany
Postal address: 36035 Fulda, Germany
Phone: +49 661 6003-0
Fax: +49 661 6003-607
Email: mail@jumo.net
Internet: www.jumo.net

JUMO Instrument Co. Ltd.
JUMO House
Temple Bank, Riverway
Harlow, Essex, CM20 2DY, UK
Phone: +44 1279 63 55 33
Fax: +44 1279 62 50 29
Email: sales@jumo.co.uk
Internet: www.jumo.co.uk

JUMO Process Control, Inc.
6724 Joy Road
East Syracuse, NY 13057, USA
Phone: +1 315 437 5866
Fax: +1 315 437 5860
Email: info.us@jumo.net
Internet: www.jumousa.com

Environmental influences

Admissible temperatures					
Operation	Version	Temperature class	Maximum medium temperature	Ambient temperature[a]	Expanded ambient temperature (extra code 681)[a, b, c]
	Standard		120 °C	-40 to +85 °C	-50 to +85 °C
	High temperature		200 °C	10 to 85 °C[d]	Not available
	II 1/2G Ex ia	T6	60 °C	-40 to +50 °C	-50 to +50 °C
		T5	70 °C	-40 to +65 °C	-50 to +65 °C
		T4	115 °C	-40 to +85 °C	-50 to +85 °C
		T3[e]	175 °C	10 to 85 °C	Not available
	II 1/2D Ex ia	T105 °C	100 °C	-40 to +60 °C	-50 to +60 °C
Storage	-40 to +85 °C				
Admissible humidity					
Operation	100 % including condensation on the device outer case				
Storage	90 % without condensation				
Admissible mechanical load					
Vibration strength	2 g, 10 to 2000 Hz according to DIN EN 60068-2-6				
Shock resistance	15 g for 6 ms according to IEC 60068-2-27				
Electromagnetic compatibility	According to EN 61326				
Interference emission	Class B[f]				
Interference immunity	Industry				
Protection type					
For version					
Explosion protection 0 (without)	IP66/67 according to DIN 60529				
Explosion protection 1 (ATEX Ex ia)	IP66 according to DIN 60529				

[a] Under -20 °C limited function: stationary use, increased danger of cable break, display without function; under -30 °C operation of the device not possible.

[b] In the range from -40 to -50 °C the device must be permanently in operation. Furthermore, the lid with the device inspection glass must additionally be protected against mechanical impact and shocks. Please contact JUMO for further details.

[c] Without SIL

[d] Low ambient temperatures up to -40 °C are possible, but with limited accuracy.

[e] Only for high-temperature version (medium temperature 2)

[f] The product is suitable for industrial use as well as for households and small businesses.

JUMO GmbH & Co. KG
Delivery address: Mackenrodtstraße 14
36039 Fulda, Germany
Postal address: 36035 Fulda, Germany
Phone: +49 661 6003-0
Fax: +49 661 6003-607
Email: mail@jumo.net
Internet: www.jumo.net

JUMO Instrument Co. Ltd.
JUMO House
Temple Bank, Riverway
Harlow, Essex, CM20 2DY, UK
Phone: +44 1279 63 55 33
Fax: +44 1279 62 50 29
Email: sales@jumo.co.uk
Internet: www.jumo.co.uk

JUMO Process Control, Inc.
6724 Joy Road
East Syracuse, NY 13057, USA
Phone: +1 315 437 5866
Fax: +1 315 437 5860
Email: info.us@jumo.net
Internet: www.jumousa.com

Accuracy

Including non-linearity, hysteresis, non-repeatability, zero point and final value deviation (corresponds to measurement deviations according to IEC 61298-2), calibrated at vertical installation position with the process connection at the bottom

Relative pressure				
Nominal measuring range	-600 to +600 mbar	-1 to +2.5 bar	-1 to +4 bar	-1 to +10 bar
Default measuring range	0 to 600 mbar	0 to 2.5 bar	0 to 4 bar	0 to 10 bar
Smallest MSP[a]	60 mbar	0.1 bar	0.1 bar	0.5 bar
Turndown ratio (r)[b]	r ≤ 20	r ≤ 50	r ≤ 50	r ≤ 50
Non-linearity for reference conditions[c]	0.06 %	0.04 %	0.04 %	0.04 %
Accuracy in % of the set MSP Range: -20 to +60 °C	r × 0.12 % for 1 ≤ r ≤ 20	r × 0.08 % for 1 ≤ r ≤ 50	r × 0.08 % for 1 ≤ r ≤ 50	r × 0.08 % for 1 ≤ r ≤ 50
Accuracy in % of the set MSP Range: -40 to -20 °C or 60 to 85 °C	r × 0.18 % for 1 ≤ r ≤ 20[d]	r × 0.12 % for 1 ≤ r ≤ 50	r × 0.12 % for 1 ≤ r ≤ 50	r × 0.12 % for 1 ≤ r ≤ 50
Long-term stability in % as of the nominal measuring range	0.1 %/year			
Relative pressure				
Nominal measuring range	-1 to +25 bar	-1 to +100 bar	-1 to +250 bar	-1 to +600 bar
Default measuring range	0 to 25 bar	0 to 100 bar	0 to 250 bar	0 to 600 bar
Smallest MSP	0.5 bar	5 bar	12.5 bar	30 bar
Turndown ratio (r)[b]	r ≤ 52	r ≤ 20	r ≤ 20	r ≤ 20
Non-linearity for reference conditions[c]	0.04 %	0.04 %	0.04 %	0.08 %
Accuracy in % of the set MSP Range: -20 to +60 °C	r × 0.08 % for 1 ≤ r ≤ 52	r × 0.08 % for 1 ≤ r ≤ 20	r × 0.08 % for 1 ≤ r ≤ 20	r × 0.16 % for 1 ≤ r ≤ 20
Accuracy in % of the set MSP Range: -40 to -20 °C or 60 to 85 °C	r × 0.12 % for 1 ≤ r ≤ 52	r × 0.12 % for 1 ≤ r ≤ 20	r × 0.12 % for 1 ≤ r ≤ 20	r × 0.24 % for 1 ≤ r ≤ 20
Long-term stability in % as of the nominal measuring range	0.1 %/year			

JUMO GmbH & Co. KG
Delivery address: Mackenrodtstraße 14
36039 Fulda, Germany
Postal address: 36035 Fulda, Germany
Phone: +49 661 6003-0
Fax: +49 661 6003-607
Email: mail@jumo.net
Internet: www.jumo.net

JUMO Instrument Co. Ltd.
JUMO House
Temple Bank, Riverway
Harlow, Essex, CM20 2DY, UK
Phone: +44 1279 63 55 33
Fax: +44 1279 62 50 29
Email: sales@jumo.co.uk
Internet: www.jumo.co.uk

JUMO Process Control, Inc.
6724 Joy Road
East Syracuse, NY 13057, USA
Phone: +1 315 437 5866
Fax: +1 315 437 5860
Email: info.us@jumo.net
Internet: www.jumousa.com

Absolute pressure				
Nominal measuring range	0 to 600 mbar	0 to 2.5 bar	0 to 4 bar	0 to 10 bar
Default measuring range	0 to 600 mbar	0 to 2.5 bar	0 to 4 bar	0 to 10 bar
Smallest MSP[a]	60 mbar	0.1 bar	0.1 bar	0.5 bar
Turndown ratio (r)[b]	r ≤ 10	r ≤ 20	r ≤ 40	r ≤ 20
Non-linearity for reference conditions[c]	0.12 %	0.04 %	0.04 %	0.04 %
Accuracy in % of the set MSP Range: -20 to +60 °C	r × 0.24 % for 1 ≤ r ≤ 10	r × 0.08 % for 1 ≤ r ≤ 20	r × 0.08 % for 1 ≤ r ≤ 40	r × 0.08 % for 1 ≤ r ≤ 20
Accuracy in % of the set MSP Range: -40 to -20 °C or 60 to 85 °C	r × 0.36 % for 1 ≤ r ≤ 10[d]	r × 0.16 % for 1 ≤ r ≤ 20	r × 0.16 % for 1 ≤ r ≤ 40	r × 0.16 % for 1 ≤ r ≤ 20
Long-term stability in % as of the nominal measuring range	0.1 %/year			
Absolute pressure				
Nominal measuring range	0 to 25 bar	0 to 100 bar		
Default measuring range	0 to 25 bar	0 to 100 bar		
Smallest MSP[a]	0.5 bar	5 bar		
Turndown ratio (r)[b]	r ≤ 50	r ≤ 20		
Non-linearity for reference conditions[c]	0.04 %	0.04 %		
Accuracy in % of the set MSP Range: -20 to +60 °C	r × 0.08 % for 1 ≤ r ≤ 50	r × 0.08 % for 1 ≤ r ≤ 20		
Accuracy in % of the set MSP Range: -40 to -20 °C or 60 to 85 °C	r × 0.16 % for 1 ≤ r ≤ 50	r × 0.12 % for 1 ≤ r ≤ 20		
Long-term stability in % as of the nominal measuring range	0.1 %/year			

[a] MSP = measuring span

[b] r = span of the nominal measuring range ÷ adjusted measuring span

[c] Reference conditions: ambient temperature 20 °C (±3 K), air pressure 1000 hPa (±25 hPa)

[d] Only up to -30 °C

JUMO GmbH & Co. KG
Delivery address: Mackenrodtstraße 14
36039 Fulda, Germany
Postal address: 36035 Fulda, Germany
Phone: +49 661 6003-0
Fax: +49 661 6003-607
Email: mail@jumo.net
Internet: www.jumo.net

JUMO Instrument Co. Ltd.
JUMO House
Temple Bank, Riverway
Harlow, Essex, CM20 2DY, UK
Phone: +44 1279 63 55 33
Fax: +44 1279 62 50 29
Email: sales@jumo.co.uk
Internet: www.jumo.co.uk

JUMO Process Control, Inc.
6724 Joy Road
East Syracuse, NY 13057, USA
Phone: +1 315 437 5866
Fax: +1 315 437 5860
Email: info.us@jumo.net
Internet: www.jumousa.com

Approvals and approval marks

ATEX	
Testing agency	Eurofins Electrosuisse Product Testing AG
Certificates/certification numbers	SEV 09 ATEX 0138 X
Inspection basis	EN 60079-0, EN 60079-11, EN 60079-26
Valid for	Type 403025/x-1-...
DNV-GL	
Testing agency	DNV-GL
Certificates/certification numbers	TAA00001KB
Inspection basis	DNV GL CG-0339
Valid for	Type 403025/x-1-.../880
EAC TR ZU	
Testing agency	RU
Certificates/certification numbers	RU C-DE.HB07.B.00086/20
Inspection basis	TR ZU 012/2011 (Ex)
Valid for	Extra code 226
SIL	
Testing agency	exida
Certificates/certification numbers	JUMO 2203088 C001
Inspection basis	IEC 61508/-1/-2/-3
Valid for	Basic type extension 2

The special conditions for use can be found in the type examination certificate, which is available for download on the Internet on the respective product page.

JUMO GmbH & Co. KG
Delivery address: Mackenrodtstraße 14
36039 Fulda, Germany
Postal address: 36035 Fulda, Germany
Phone: +49 661 6003-0
Fax: +49 661 6003-607
Email: mail@jumo.net
Internet: www.jumo.net

JUMO Instrument Co. Ltd.
JUMO House
Temple Bank, Riverway
Harlow, Essex, CM20 2DY, UK
Phone: +44 1279 63 55 33
Fax: +44 1279 62 50 29
Email: sales@jumo.co.uk
Internet: www.jumo.co.uk

JUMO Process Control, Inc.
6724 Joy Road
East Syracuse, NY 13057, USA
Phone: +1 315 437 5866
Fax: +1 315 437 5860
Email: info.us@jumo.net
Internet: www.jumousa.com

Dimensions

Type 403025/0-0-1 (short, stainless steel, with M12 connection)

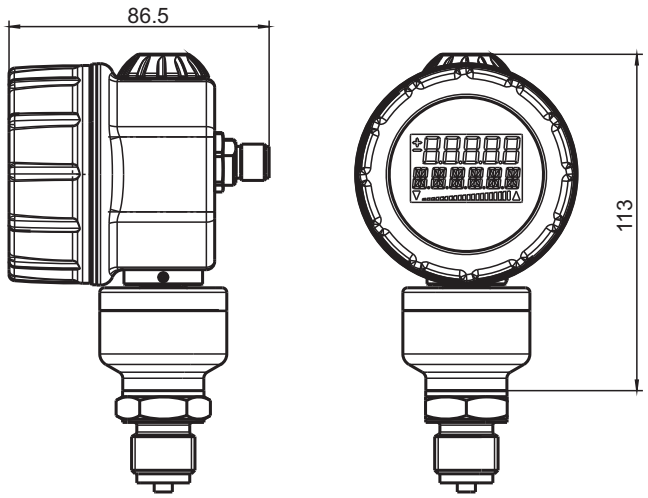

Type 403025/0-0-2 (long, stainless steel, with cable fitting)

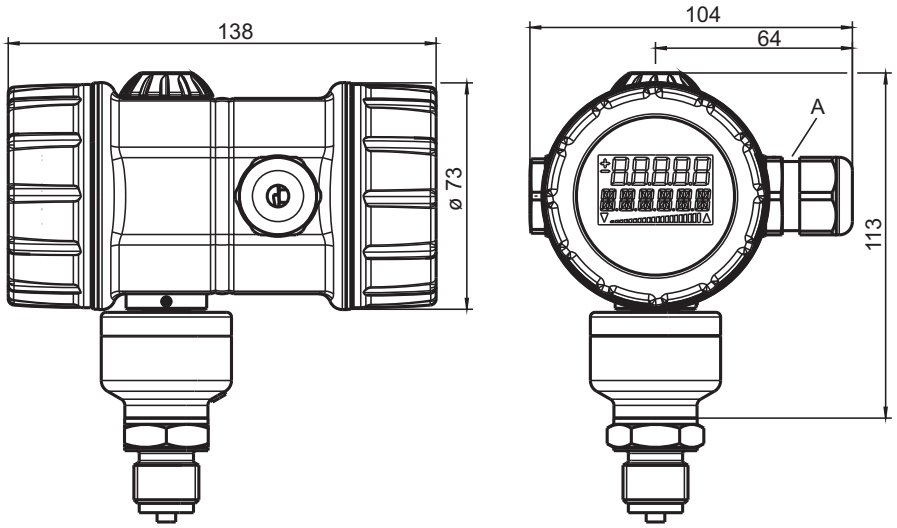

A M20 × 1.5 cable fitting

JUMO GmbH & Co. KG
Delivery address: Mackenrodtstraße 14
36039 Fulda, Germany
Postal address: 36035 Fulda, Germany
Phone: +49 661 6003-0
Fax: +49 661 6003-607
Email: mail@jumo.net
Internet: www.jumo.net

JUMO Instrument Co. Ltd.
JUMO House
Temple Bank, Riverway
Harlow, Essex, CM20 2DY, UK
Phone: +44 1279 63 55 33
Fax: +44 1279 62 50 29
Email: sales@jumo.co.uk
Internet: www.jumo.co.uk

JUMO Process Control, Inc.
6724 Joy Road
East Syracuse, NY 13057, USA
Phone: +1 315 437 5866
Fax: +1 315 437 5860
Email: info.us@jumo.net
Internet: www.jumousa.com

Type 403025/0-0-3 (precision casting, with cable fitting)

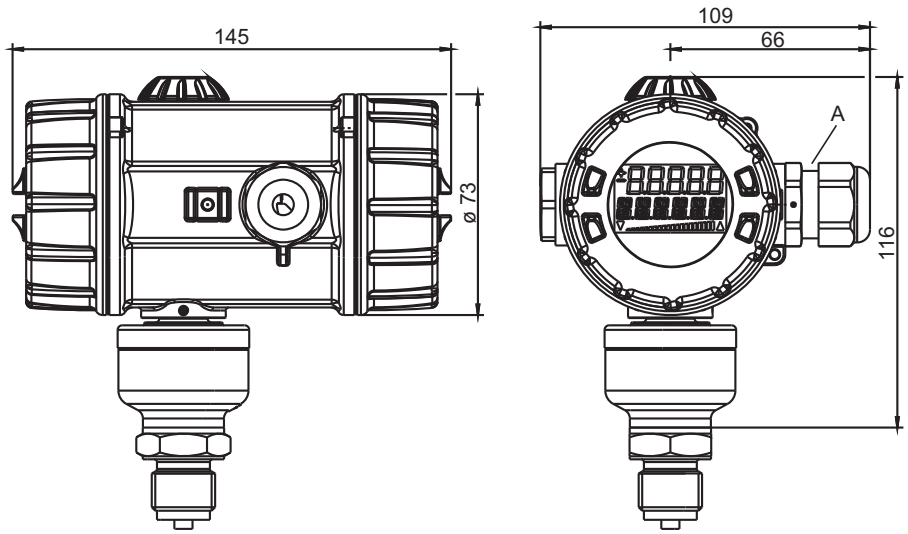

A M20 × 1.5 cable fitting

Dimensions at medium temperature 2 (high-temperature version)

Pressure transmitters that are suitable for medium temperatures up to 200 °C have an extended shaft through which the increased temperature is discharged. The total height of all pressure transmitters in this version increases by 41 mm as shown in the following figure.

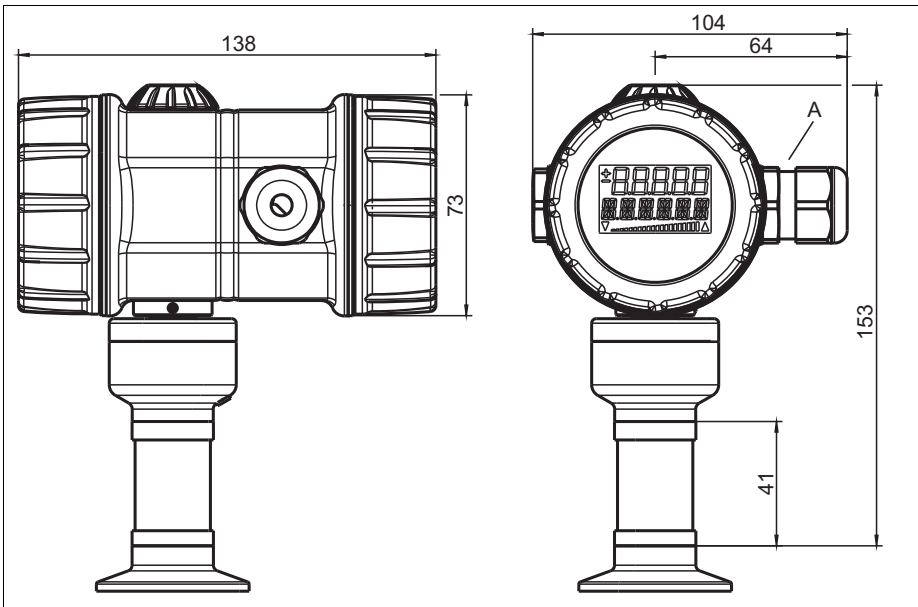

A M20 × 1.5 cable fitting

JUMO GmbH & Co. KG
Delivery address: Mackenrodtstraße 14
36039 Fulda, Germany
Postal address: 36035 Fulda, Germany
Phone: +49 661 6003-0
Fax: +49 661 6003-607
Email: mail@jumo.net
Internet: www.jumo.net

JUMO Instrument Co. Ltd.
JUMO House
Temple Bank, Riverway
Harlow, Essex, CM20 2DY, UK
Phone: +44 1279 63 55 33
Fax: +44 1279 62 50 29
Email: sales@jumo.co.uk
Internet: www.jumo.co.uk

JUMO Process Control, Inc.
6724 Joy Road
East Syracuse, NY 13057, USA
Phone: +1 315 437 5866
Fax: +1 315 437 5860
Email: info.us@jumo.net
Internet: www.jumousa.com

Process connections

504
G 1/2

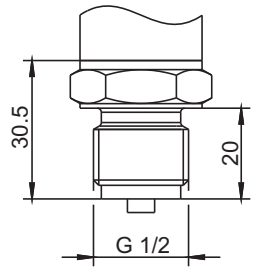

512
1/2-14 NPT

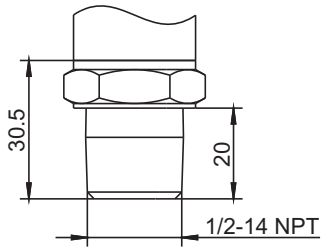

564
1/2-14 NPT internal

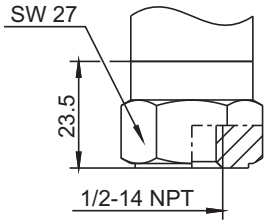

571
G 3/4

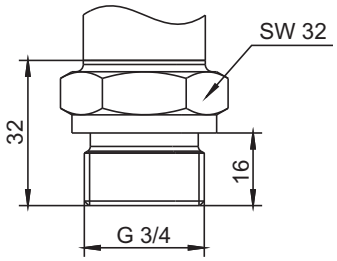

583
M20 (× 1.5) with pin

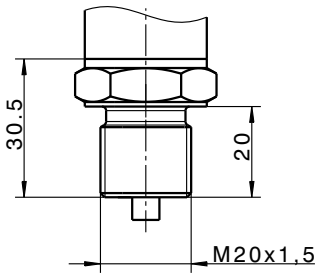

JUMO GmbH & Co. KG
Delivery address: Mackenrodtstraße 14
36039 Fulda, Germany
Postal address: 36035 Fulda, Germany
Phone: +49 661 6003-0
Fax: +49 661 6003-607
Email: mail@jumo.net
Internet: www.jumo.net

JUMO Instrument Co. Ltd.
JUMO House
Temple Bank, Riverway
Harlow, Essex, CM20 2DY, UK
Phone: +44 1279 63 55 33
Fax: +44 1279 62 50 29
Email: sales@jumo.co.uk
Internet: www.jumo.co.uk

JUMO Process Control, Inc.
6724 Joy Road
East Syracuse, NY 13057, USA
Phone: +1 315 437 5866
Fax: +1 315 437 5860
Email: info.us@jumo.net
Internet: www.jumousa.com

604 and 606

Taper socket with grooved union nut according to DIN 11851

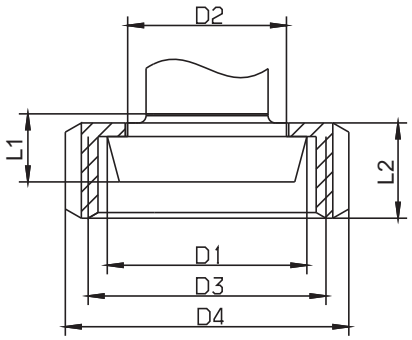

613 and 616

Clamp according to DIN 32676

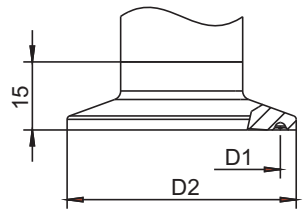

652

Tank connection with grooved union nut DN 25

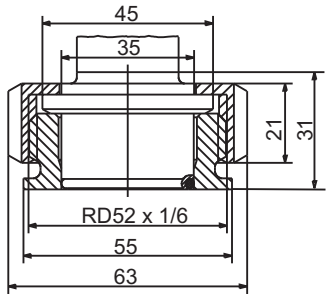

997

JUMO PEKA

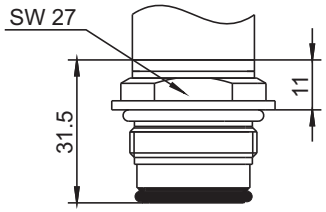

Dimensions of the process connections 604, 606, 613, and 616

Connection	DN	D1	D2	D3	D4	L1	L2
604	25	Ø 44	Ø 35	Rd 52 × 1/6“	Ø 63	15	21
606	40	Ø 56	Ø 48	Rd 65 × 1/6“	Ø 78		
613	25	Ø 43,5	Ø 50.5				
616	50	Ø 56,5	Ø 64				

JUMO GmbH & Co. KG
Delivery address: Mackenrodtstraße 14
36039 Fulda, Germany
Postal address: 36035 Fulda, Germany
Phone: +49 661 6003-0
Fax: +49 661 6003-607
Email: mail@jumo.net
Internet: www.jumo.net

JUMO Instrument Co. Ltd.
JUMO House
Temple Bank, Riverway
Harlow, Essex, CM20 2DY, UK
Phone: +44 1279 63 55 33
Fax: +44 1279 62 50 29
Email: sales@jumo.co.uk
Internet: www.jumo.co.uk

JUMO Process Control, Inc.
6724 Joy Road
East Syracuse, NY 13057, USA
Phone: +1 315 437 5866
Fax: +1 315 437 5860
Email: info.us@jumo.net
Internet: www.jumousa.com

Connection diagram

The connection diagram in the data sheet provides information on product selection.

For the electrical connection, only use the installation instructions or the operating manual.

Connection	**Terminal assignment**	
	82 (plastic), 93 (metal) Cable gland	36 Round plug M12 × 1
Voltage supply DC 12 to 36 V for **none** Ex version DC 12 to 28 V for Ex version	1 L+ 2 L-	1 L+ 3 L-
Output 4 to 20 mA, two-wire Impressed current 4 to 20 mA in voltage supply	1 L+ 2 L-	1 L+ 3 L-
Current output test connection Inherent resistance of ammeter ≤ 10 Ω	TEST + TEST -	
HART® test connection Burden must be present!	HART + HART -	
Functional ground	3	4

Cable fitting

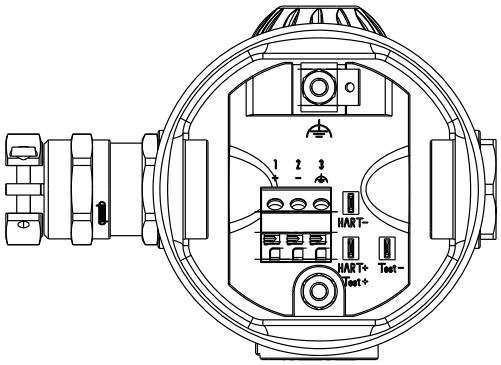

Round plug M12 × 1



JUMO GmbH & Co. KG
Delivery address: Mackenrodtstraße 14
36039 Fulda, Germany
Postal address: 36035 Fulda, Germany
Phone: +49 661 6003-0
Fax: +49 661 6003-607
Email: mail@jumo.net
Internet: www.jumo.net

JUMO Instrument Co. Ltd.
JUMO House
Temple Bank, Riverway
Harlow, Essex, CM20 2DY, UK
Phone: +44 1279 63 55 33
Fax: +44 1279 62 50 29
Email: sales@jumo.co.uk
Internet: www.jumo.co.uk

JUMO Process Control, Inc.
6724 Joy Road
East Syracuse, NY 13057, USA
Phone: +1 315 437 5866
Fax: +1 315 437 5860
Email: info.us@jumo.net
Internet: www.jumousa.com

Order details

	(1)	**Basic type**
403025		JUMO dTRANS p20 - process pressure transmitter
	(2)	**Basic type extension**
0		None
2		SIL[a]
9		Special version
	(3)	**Explosion protection**
0		None
1		ATEX Ex ia[b]
	(4)	**Housing**
1		Short, stainless steel, with M12 connection[c]
2		Long, stainless steel, with cable fitting
3		Precision casting, with cable fitting
	(5)	**Electrical connection**
36		Round plug M12 × 1[c]
82		Plastic cable fitting
93		Metal cable fitting
	(6)	**Cover material**
20		CrNi (stainless steel)
85		Plastic
	(7)	**Display**
0		None
1		With display (LCD)
	(8)	**Operation**
0		None
1		With control knob
	(9)	**Input – nominal measuring range**
450		-600 to +600 mbar relative pressure
473		-1 to +2.5 bar relative pressure
513		-1 to +4 bar relative pressure
472		-1 to +10 bar relative pressure
514		-1 to +25 bar relative pressure
515		-1 to +100 bar relative pressure[d]
508		-1 to +250 bar relative pressure[e]
516		-1 to +600 bar relative pressure[e]
487		0 to 0.6 bar absolute pressure
490		0 to 2.5 bar absolute pressure
491		0 to 4 bar absolute pressure
493		0 to 10 bar absolute pressure
495		0 to 25 bar absolute pressure
507		0 to 100 bar absolute pressure[d]
	(10)	**Output**
405		4 to 20 mA, two-wire
410		4 to 20 mA, two-wire with HART® protocol

JUMO GmbH & Co. KG
Delivery address: Mackenrodtstraße 14
36039 Fulda, Germany
Postal address: 36035 Fulda, Germany
Phone: +49 661 6003-0
Fax: +49 661 6003-607
Email: mail@jumo.net
Internet: www.jumo.net

JUMO Instrument Co. Ltd.
JUMO House
Temple Bank, Riverway
Harlow, Essex, CM20 2DY, UK
Phone: +44 1279 63 55 33
Fax: +44 1279 62 50 29
Email: sales@jumo.co.uk
Internet: www.jumo.co.uk

JUMO Process Control, Inc.
6724 Joy Road
East Syracuse, NY 13057, USA
Phone: +1 315 437 5866
Fax: +1 315 437 5860
Email: info.us@jumo.net
Internet: www.jumousa.com

	(11)	**Process connection**
504		G 1/2 according to DIN EN 837
512		1/2-14 NPT according to DIN EN 837
559		M20 × 1.5 according to DIN 3852-11
564		1/2-14 NPT internal
571		G 3/4 front-flush according to DIN EN ISO 228-1
583		M20 × 1.5 with pin
604		Taper socket with union nut DN 25 according to DIN 11851 (dairy pipe fitting)
606		Taper socket with union nut DN 40 according to DIN 11851 (dairy pipe fitting)
613		Clamp connection (clamp) DN 25 according to DIN 32676
616		Clamp connection (clamp) DN 50 according to DIN 32676 (2“ ISO 2852)
652		Tank connection with grooved union nut DN 25
997		JUMO PEKA – Hygienic process connection
998		Diaphragm seal version, screwed
	(12)	**Medium temperature**
1		Up to 120 °C[b]
2		Up to 200 °C[b]
	(13)	**Process connection material**
20		CrNi (stainless steel)
82		NiMo[f]
	(14)	**Measuring system, filling medium**
00		None
01		Silicon oil
	(15)	**Extra codes**
100		Customer-specific factory setting[g]
226		GOST/EAC approval[h]
374		Inspection certificate 3.1 DIN EN 10204 material
452		Electrolytically polished parts
591		Choke in the pressure channel
624		Oil and grease free
630		Enlarged pressure channel
634		TAG number
635		NACE manufacturer's declaration[i]
681		Expanded admissible ambient temperature
691		Improved moisture and vibration protection
880		DNV GL approval[j]

[a] Only available with output 410 and display 1. Not available with input 508 and 516 and also with extra code 681.

[b] Only available with output 410. Not available with electrical connection 82 and cover material 85. The medium temperature 1 is valid until 115 °C. The medium temperature 2 is valid until 175 °C.

[c] The housing 1 is only available with electrical connection 82 and vice versa.

[d] Not available with process connection 604, 606, 613, 616.

[e] Not available with process connection 571, 604, 606, 613, 616, 997.

[f] Not available with input 450, 573, 513, 572, 487, 490, 491, 493.

[g] Please specify the setting you want in plain text. For default setting see “Accuracy” section in the data sheet.

[h] Available upon request.

[i] Only available with process connection 512, 564 and process connection material 82. Not available with input 450, 487.

[j] Only available with explosion protection 1. Not available with input 516.

	(1)		(2)		(3)		(4)		(5)		(6)		(7)		(8)		(9)		(10)		(11)		(12)		(13)		(14)		(15)
Order code		/		-		-		-		-		-		-		-		-		-		-		-		-	/	
Order example	403025	/	0	-	0	-	2	-	82	-	85	-	1	-	1	-	514	-	405	-	504	-	1	-	20	-	1	/	000

JUMO GmbH & Co. KG
Delivery address: Mackenrodtstraße 14
36039 Fulda, Germany
Postal address: 36035 Fulda, Germany
Phone: +49 661 6003-0
Fax: +49 661 6003-607
Email: mail@jumo.net
Internet: www.jumo.net

JUMO Instrument Co. Ltd.
JUMO House
Temple Bank, Riverway
Harlow, Essex, CM20 2DY, UK
Phone: +44 1279 63 55 33
Fax: +44 1279 62 50 29
Email: sales@jumo.co.uk
Internet: www.jumo.co.uk

JUMO Process Control, Inc.
6724 Joy Road
East Syracuse, NY 13057, USA
Phone: +1 315 437 5866
Fax: +1 315 437 5860
Email: info.us@jumo.net
Internet: www.jumousa.com

Accessories

Designation	Part no.
4-pole cable box, straight, M12 × 1 with 2 m PVC cable	00404585
4-pole cable box, angled, M12 × 1 with 2 m PVC cable	00409334
PC interface with USB/TTL converter[a]	00456352
HART® modem USB[b]	00443447
Ex-i repeater power supply/input isolating amplifier, data sheet 707530	00577948
Measuring device holder for wall and 2" pipe	00597711

Designation	Data sheet
Valve manifolds	409706
JUMO PEKA – Hygienic process connection	409711
Diaphragm seal with dairy pipe fitting DIN 11851	409772
Diaphragm seal with clamp connection	409774
Diaphragm seal with DRD flange or VARIVENT® socket	409776
Diaphragm seal with ISS/SMS/RJT socket and (grooved) union nut	409778
Membrane diaphragm seal 4MDV-10	409780
Diaphragm seal with screw-in thread DIN ISO 228/1 or ANSI B1.201	409782
Diaphragm seal with flange connection DIN EN 1092-1 with sealing strip form B1	409784
Diaphragm seal with flange connection according to ANSI B 16.5 with sealing strip form RF	409786
Ex-i repeater power supply/input isolating amplifier	707530

[a] The PC interface cable is the connection between the JUMO interface of the differential pressure transmitter and the USB interface of a PC.

[b] The HART® modem is the connection between the HART® interface of the differential pressure transmitter and the USB interface of a PC.

Software

Description	Part no.
JUMO setup dTRANS p20 series	00537577
Device Type Manager (DTM), JUMO dTRANS p20	00738288

Stock versions

Order code	Input	Part no.
403025/0-1-1-36-20-1-1-450-410-504-1-20-01/000	-600 to +600 mbar relative pressure	00563929
403025/0-1-1-36-20-1-1-513-410-504-1-20-01/000	-1 to +4 bar relative pressure	00557370
403025/0-1-1-36-20-1-1-514-410-504-1-20-01/000	-1 to +25 bar relative pressure	00572278
403025/0-1-1-36-20-1-1-491-410-504-1-20-01/000	0 to 4 bar absolute pressure	00573299