IG5823

Inductive sensor

IGB2008-ARKG/UP/US-100-IRS RT

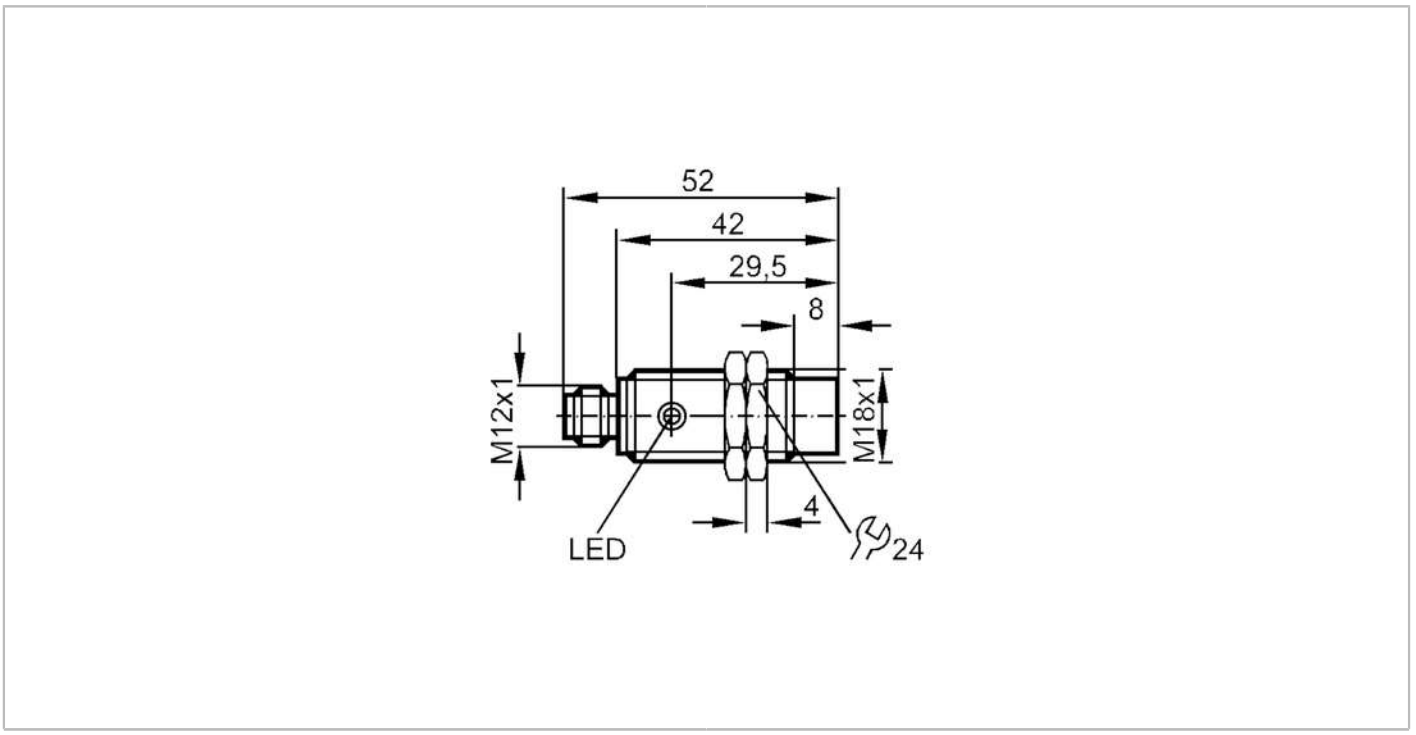

Product characteristics		
Electrical design		PNP/NPN
Output function		normally open
Sensing range	[mm]	8
Housing		threaded type
Dimensions	[mm]	M18 x 1
Electrical data		
Operating voltage	[V]	10...36 DC
Protection class		II
Reverse polarity protection		yes
Outputs		
Electrical design		PNP/NPN
Output function		normally open
Max. voltage drop switching output DC	[V]	4.6
Minimum load current	[mA]	4
Max. leakage current	[mA]	0.8
Permanent current rating of switching output DC	[mA]	150
Switching frequency DC	[Hz]	720
Short-circuit protection		yes
Type of short-circuit protection		pulsed
Overload protection		yes

IG5823

Inductive sensor

IGB2008-ARKG/UP/US-100-IRS RT

Detection zone			
Sensing range	[mm]	8	
Real sensing range Sr	[mm]	8 ± 10 %	
Operating distance	[mm]	0...6.5	
Accuracy / deviations			
Correction factor		steel: 1 / stainless steel: 0.7 / brass: 0.5 / aluminium: 0.4 / copper: 0.3	
Hysteresis	[% of Sr]	3...15	
Switch point drift	[% of Sr]	-10...10	
Operating conditions			
Ambient temperature	[°C]	-25...80	
Protection		IP 67	
Tests / approvals			
EMC		EN 60947-5-2	
		EN 55011	class B
MTTF	[years]	2583	
Mechanical data			
Weight	[g]	64.4	
Housing		threaded type	
Mounting		non-flush mountable	
Dimensions	[mm]	M18 x 1	
Thread designation		M18 x 1	
Materials		brass nickel-plated; PC	
Displays / operating elements			
Display		switching status	1 x LED, red
Accessories			
Items supplied		lock nuts: 2	
Remarks			
Pack quantity		1 pcs.	

Electrical connection - plug

Connector: 1 x M12; coding: A



IG5823

Inductive sensor

IGB2008-ARKG/UP/US-100-IRS RT

Connection

